WARREN COUNTY DEVELOPMENT REVIEW REGULATIONS

June 2002

Adopted August 21, 2002

Effective October 14, 2002

Revised February 26, 2007

Adopted April 25, 2007

Effective June 11, 2007

Adopted December 8, 2010

Effective January 1, 2011

Adopted February 8, 2012

Effective February 15, 2012

WARREN COUNTY

NEW JERSEY

Prepared Pursuant to

R.S. 40:27-6.2 and R.S. 40:27-6.6

Warren County Board of Chosen Freeholders

Everett A. Chamberlain, Freeholder Director
Richard D. Gardner, Deputy Freeholder Director
Jason Sarnoski, Freeholder

Warren County Planning Board

Desiree L. Dunn, Chairperson
William E. Hann, Jr., Vice Chairperson
David A. Smith, Secretary
Everett A. Chamberlain, Freeholder
Richard D. Gardner, Freeholder
David B. Hicks, County Engineer
Robert I. Frey
Deborah A. Pasquarelli
Anthony W. Wyhopen
Louis J. Baduini, Alternate 1
Guy R. Wilson, Attorney

Warren County Planning Department

David K. Dech, Planning Director
Richard A. Miller, Principal Planner
Albert J. Krouse, Senior Planner
Brian Appezzato, Senior Planner
Elizabeth Roy, Principal Planning Aide
Rosemarie Homa, Administrative Clerk
Nancy Dietz, Keyboarding Clerk

Warren County Engineering Department

David B. Hicks, County Engineer
Barth R. Johnson, Assistant County Engineer
Nicholas Paolella, Supervising Engineer
Linda J. Read, Principal Engineering Bridge

TABLE OF CONTENTS

Page

Chapter I **Title, Applicability, Purpose and Policy Objectives** I-1

A. Title I-1
B. Applicability I-1
C. Purpose & Policy Objectives I-1
D. Approving Agency Statutory Authority I-1
E. Language I-1
F. Repeal of Conflicting Regulations I-2
G. Effective Date I-2
H. Severability I-2

Chapter II **Definitions for Warren County Land Development Review Regulation** II-1

Chapter III **Submission and Review Procedures** III-1

A. Plan Submission
1. Preapplication Review and Conferences III-1
2. Required Submissions III-1
a. Subdivisions
b. Site Plans
3. Submission Requirements III-2
B. Classification of Plan and Level of Review and Approval III-3
1. Review and Classify III-3
a. Non-Binding Review
b. Full Planning Board Review
(1) Subdivisions
(2) Site Plans
c. Review by Staff
d. Exempt After Review
2. Review Fee Schedule III-6
3. Changes in Classification III-6
C. Review and Approval Procedures III-6
1. Completeness III-6
2. Departmental and Agency Review III-7
a. Planning Department
b. County Engineer
c. Shade Tree Commission
d. Morris Canal Committee
3. Appearance Before County Planning Board III-8
4. Time to Act III-9

5. Types of Action Taken.....III-9
6. Resubmittal Procedures III-10
7. Notification of County Action III-10
8. Local Approval Prior to County Action or Approval III-11
9. Simultaneous Review of Multiple Submissions III-11
10. Review and Approval of Phased Development Applications.....III-12
11. Changes to Plans After Approval III-12
12. Effect of County Approval and Extensions III-13
13. Certification of Final Subdivision for Filing with County Clerk..III-13

D. Sanctions for Non-Compliance.....III-14
E. Waivers and Appeals III-14

Chapter IV Development Design Requirements IV-1

A. Warren County Highway and Bridge Standards
B. Coordination with Municipal Standards
C. State of New Jersey Regulations
D. Morris Canal Preservation Standards

Chapter V Consistency with Other County Plans, Programs V-1

A. Warren County Master Plan V-1
B. Historic Impact Review V-1
C. Outside Agency Review V-1

Appendix A Subdivision and Site Plan Fee Schedule A-1

Appendix B Development Review Regulations Checklist for Development Applications B-1

Appendix C Warren County Planning Department Application Form.....C-1

Appendix D Morris Canal Historic Preservation Requirements.....D-1

Appendix E Warren County Highway and Bridge Standards E-1

CHAPTER I
TITLE, APPLICABILITY, PURPOSE AND POLICY OBJECTIVES

A. TITLE

These regulations shall be known as the *Warren County Development Review Regulations.*

B. APPLICABILITY

The regulations and standards established herein shall apply to all development of lands which directly or indirectly impact the county road system or county storm water facilities system under county jurisdiction, or which otherwise fall within county jurisdiction, except as specifically provided in these regulations.

C. PURPOSE AND POLICY OBJECTIVES

1. To provide rules, regulations and standards to guide land development that affects or involves county facilities pursuant to the New Jersey County Planning Act N.J.S.A. 40:27-1 et seq as supplemented by laws heretofore promulgated.

2. To provide regulations which ensure that land development within the county proceeds in accordance with the goals and objectives of the Warren County Master Plan and other adopted county plans, regulations and/or standards.

3. To establish standards and procedures for assessing developers for a proportionate share of improvements to county road systems and drainage facilities which are the direct result of or bear a rational nexus to the development.

D. APPROVING AGENCY STATUTORY AUTHORITY

The regulations and standards established herein are administered by the Warren County Planning Board, established pursuant to N.J.S.A. 40:27-1 et seq, or any department, division, board or agency established by the Warren County Board of Chosen Freeholders to exercise such duties.

E. LANGUAGE

1. Words used in the singular shall include the plural and the plural shall include the singular; words used in the present tense shall include the future tense.

2. All references to "the County" herein refer to the County of Warren; all references to "the Board" refer to the Warren County Planning Board; and all references to "the Regulations" refer to this document, the *Warren County Development Review*

Regulations.

F. REPEAL OF CONFLICTING REGULATIONS

All chapters or parts of chapters which are inconsistent with the provisions of these regulations are hereby repealed to the extent of such inconsistency and shall therefore be deemed to be of no force and effect.

G. EFFECTIVE DATE

The Regulations shall take effect as provided by law.

H. SEVERABILITY

If any subchapter, section, subsection, provision, clause, or portion of these Regulations, or the application thereof to any person, is adjudged unconstitutional or invalid by a court of competent jurisdiction, such judgment shall be confined in its operation to the subchapter, section, subsection, provision, clause, portion or application directly involved in the controversy in which such judgement shall have been rendered, and it shall not affect or impair the remainder of these Regulations or the application thereof to other persons.

CHAPTER II
DEFINITIONS FOR WARREN COUNTY LAND DEVELOPMENT REVIEW REGULATIONS

Abutting County Road

Any existing or proposed county road, shown on the Warren County Highway Designation Map or the adopted County Master Plan or Official Map, which adjoins a lot or parcel of land submitted for approval under this resolution.

Acceleration Lane

An auxiliary speed change lane primarily for the acceleration of vehicles entering the through traffic lanes. The term acceleration lane applies broadly to the added pavement joining the traveled way of the county highway with that of the intersecting road or driveway. This auxiliary lane does not necessarily imply a definite lane of uniform width or length.

Adverse Drainage Condition

The absence of adequate drainage facilities or drainage easements in a drainage way leading to, along or through a county road or county drainage structure, either within or exterior to a proposed subdivision including:

- Drainage facilities of such location, size, design, construction or condition as may not provide adequately for storm drainage.

- Drainage conditions which may cause either flooding, erosion, silting or other damaging effect to a county road or county drainage structure.

- Drainage conditions which threaten to damage property as a result of storm drainage from a county road, along a county road or through a county road or from a county drainage structure.

Agricultural Purposes

Farming and related pursuits not including the erection, alteration, enlargement, occupancy or use of any building designed for or suitable for residential occupancy.

Agricultural Subdivision

The division of land found by the County Planning Board for agricultural purpose where all resulting parcels are 5 acres or larger in size and provided no new streets are created. An

agricultural subdivision shall not be considered a subdivision pursuant to 40:27-6.1.

Amended Subdivision or Site Plan Application

An application to amend a subdivision or site plan after County Planning Board Approval.

To be considered as an amended plan, applications to amend approved projects must be submitted within twelve months of approval. Upon review, application may require a full review with appropriate fees.

Applicant

Anyone submitting an application for development.

Application Form

The form provided by the County Planning Board to an applicant seeking site plan or subdivision review or approval.

As-built Plans

Plans which reflect the exact horizontal and vertical location of improvements after construction.

Board or County Planning Board

Means a county planning board established by a county pursuant to R.S. 40:27-1 to exercise the duties set forth in such chapter, and means, in any county having adopted the revisions of the "Optional County Charter Law" (P.L. 1972, c.154; C.40:41A-1 et seq.) any department, division, board or agency established pursuant to the administrative code of such county to exercise such duties, but not to the degree and extent that the requirements specified in such chapter for county planning boards do not conflict with the organization and structure of such department, division, agency or board as set forth in the administrative code of such county.

Bridge

A structure having a clear span in excess of twenty (20) feet or more designed to convey vehicles and/or pedestrians over a water course, railroad or highway.

Building Permit

A permit required by or pursuant to law to be obtained from the appropriate official in a municipality before a building or structure may be erected or altered.

Completeness

A determination made by the County Planning Board, its authorized agency or designee that certifies material submitted as an application for development which satisfies criteria established by said Board to commence review.

Concept Plan

A concept map of a subdivision or site plan of sufficient accuracy to be used for the purpose of discussion and in accordance with the concept plan requirements in these Regulations.

Conceptual Design

Preliminary design used for estimating quantities, costs and other related information for a land development proposal; usually does not include detailed construction design.

Conditional Approval

In the event that a developer submits an application for development and has not provided all necessary details, the County Planning Board may vote to approve such application upon the condition that the applicant submit the required documentation before plans are signed by the County Engineer and the Planning Board Secretary.

Construction Plan

Documentation which depicts all necessary improvements associated with a development in a way that is appropriate for construction of said improvements.

Construction Specifications

Those items specific to the installation of the improvements agreed to by the Development Review Committee, such as the type and size of materials; field changes in elevations of installed improvements not altering or affecting neighboring properties; modifications in techniques or methods of assembly; filed changes in alignment not altering or affecting neighboring properties.

Contribution

Means an amount of money or services provided by the applicant to supply or furnish a share of an off-site improvement(s).

County Drainage Facility

Any structure or man-made system intended to control storm water drainage.

County Facility

Any roadway, bridge, culvert, storm water facility, traffic signal, land area, etc. whose maintenance responsibility falls within the County's jurisdiction.

County Master Plan or "Master Plan"

Means a composite of the master plan for the physical development of the county, with the accompanying maps, plats, charts and descriptive and explanatory matter adopted by the County Planning Board pursuant to Revised Statute 40:27-2.

Culvert

A structure designed to convey a water course under a driveway, road, railroad, or pedestrian walk, not incorporated in a closed drainage system and having a clear span of twenty (20) feet or less.

Deceleration Lane

An auxiliary speed change lane primarily for the deceleration of vehicles leaving the through traffic lanes. The term deceleration lane applies broadly to the added pavement adjoining the traveled way of the county highway with that of the intersecting road or driveway.

Dedication

An act permanently conveying private property rights by deed or other instrument for public use.

Detention Basin

A basin or depression formed by the construction of a barrier or dam built at a suitable location to detain storm water runoff and discharge this water at a reduced rate.

Developer

The legal or beneficial owner or owners of a lot or of any land proposed to be included in a proposed development including the holder of an option or contract to purchase, or other person having an enforceable interest in such land.

Development Application

Material submitted by the applicant to the County Planning Board which, by its submission, requests said Board to act within its legal jurisdiction to approve or disapprove a specified activity or activities to take place, or development to occur, upon a specific parcel of land.

Development Regulations

Means a zoning ordinance, subdivision ordinance, site plan ordinance, official map ordinance or other municipal or county regulation of the use and development of land, or amendment thereto adopted and filed pursuant to the Municipal Land Use Law.

Development Review Committee

A committee of the Warren County Planning Board which is vested with the power to review and to make recommendations concerning subdivisions and site.

Drainage Right-of-Way or Drainage Easement

The assignable rights and restrictions to the land required for the installation of an/or maintenance of storm water sewers, culverts, bridges, retention/detention areas, drainage ditches, swales or grassed waterways, or that which is required along a natural stream or watercourse for preserving the channel and providing for the flow therein, to safeguard the public against flood damage, sedimentation erosion, or for similar or related storm drainage purposes.

Drainage Watercourse

Any stream, brook or river which is the natural course of storm or running water through which water flows ordinarily and frequently but not necessarily continuously. This definition includes watercourses which have been artificially created, realigned or modified.

Driveway

Paved or unpaved area allowing access from a street to a building or other structure or facility used for ingress and egress of vehicles.

Driveway Permit

The permit issued by the County Engineer's Office for the connection of any driveway into any portion of the county road right-of-way.

Easement

A non-possessing interest held by one interested party in the land of another interested party whereby the first interested party is accorded partial use of such land for a specific purpose. An easement restricts but does not abridge the rights of the owner to the use and enjoyment of his land.

Easement for County Road Purposes

An easement to the County for the purpose of installation of utilities, construction, reconstruction, widening, or improving a county road, including the repair and maintenance of the county road, and the construction, reconstruction or alteration of facilities related to the safety, convenience or carrying capacity of the county road including drainage facilities and traffic control devices.

Farmland

A parcel of land used for agricultural activities.

Final Approval

Means the official action of the County Planning Board taken on a preliminary approved major subdivision or site plan after all conditions, engineering plans and other requirements have been completed or fulfilled and the required improvements have been installed or guarantees properly posted for their completion, or approval conditioned upon the posting of such guarantees.

Final Subdivision

The final map of all or a portion of a subdivision meeting all of the standards and regulations of this resolution and meeting all of the conditions established by the County Planning Board in granting Preliminary Approval to the subdivision and drawn in compliance with the Map Filing Act of New Jersey.

Final Site Plan

The final map of a proposed site plan on a specific parcel or parcels of land, meeting all of the standards and regulations of this resolution, and meeting all of the conditions established by the County Planning Board in granting Preliminary Approval for the site plan and drawn in compliance with the Map Filing Act of New Jersey.

Formal Review

Consideration by the Warren County Planning Board of an application for development which commences upon a determination of completeness and continues until such time as a final action is taken by said Board or the project is withdrawn by the applicant.

Floodplain

Any land area susceptible to being inundated by water from any source as delineated by the most current "Flood Hazard Maps" by the Federal Emergency Management Administration Maps and/or United States Natural Resource Conservation Service Floodplain Maps.

General Development Plan

Means a comprehensive plan for the development of a planned development C.40:55D-45.1. This includes, but is not limited to, an overall plan for a general land use plan, a circulation plan, an open space plan, a utility plan, etc. as defined in the Municipal Land Use Law C.40:55D-45.2.

Historic Impact Review

A report submitted to the Warren County Planning Board as part of either a site plan or subdivision application which meets the review requirements in these Regulations.

Historic Site

Means any real property, man-made structure, natural object or configuration or any portion or group of the foregoing of historical, archeological, cultural, scenic or architectural significance as listed on the National or State Register of Historic Places.

Impervious Coverage

Any material which reduces or prevents absorption of storm water into previously undeveloped land. All parking areas and driveways shall be considered impervious. For the purposes of any county site plan review, solar panels shall not be included in any calculation of impervious surface or impervious cover.

Land Development

The division of a parcel of land into two or more parcels; the construction, reconstruction, conversion, structural alteration, relocation or enlargement of any building or other structure, or of any mining, excavation, solid waste or recycling operation or landfill; and any use or change in the use of any building or other structure, or land or extension of use of land.

Land Development Application

The application made pursuant to this resolution for approval of a proposed land development.

Lot

Means a designated parcel, tract or area of land established by plan or otherwise as permitted by law and to be used, developed or built upon as a unit.

Lot Line Adjustment

A resubdivision where changes are made to existing lot lines in which no additional lots are created.

Maintenance Bond

Any security that is acceptable to the County Counsel, and approved by the County Engineer, to assure the maintenance of approved installations by developers.

Major Site Plan

Means any site plan not classified as a minor site plan as defined and classified by the effected municipal ordinance.

Major Subdivision

Means any subdivision not classified as a minor subdivision as defined and classified by the effected municipal ordinance.

Minor Site Plan

Means a development plan of one or more lots which (1) proposes new development within the scope of development specifically permitted by municipal ordinance as a minor site plan; (2) does not involve planned development, any new street or extension of any off-tract improvement which is to be prorated pursuant to section 30 of P.L. 1975, c. 291 (C.40:55D-42); and (3) contains the information reasonably required in order to make an informed determination as to whether the requirements established by ordinance for approval of a minor site plan have been met.

Minor Subdivision

Means a subdivision of land for the creation of a number of lots specifically permitted by ordinance as a minor subdivision; provided that such subdivision does not involve (1) a planned development, (2) any new street or (3) the extension of any off-tract improvement, the cost of which is to be prorated pursuant to section 30 of P.L. 1975, c. 291 (C. 40:55D-42).

Morris Canal

A cultural resource placed on the State and National Register of Historic Places in 1974 that traverses Warren County and includes the land, structures, objects and artifacts of historical importance.

Municipal Approving Authority

The local planning board or zoning board of adjustment to whom an application for development is submitted for approval under the Municipal Land Use Law N.J.S.A. 40:55D et seq.

New Building Lot

Any lot being created by a subdivision upon which one or more principal buildings or structures could be erected under the provisions of the municipal zoning ordinance in the municipality in which said lot is located.

Nonprofit Institution

Means a not-for-profit organization, such as charitable, philanthropic, fraternal, and religious non profit, as recognized by the United States Department of the Treasury Internal Revenue Service.

Official County Map

Means the map, with changes and additions thereto, adopted and established, from time to time, by resolution of the Board of Chosen Freeholders of the County pursuant to Revised Statutes 40:27-5.

Off-Tract

Not located on the property which is the subject of a development application, nor on a contiguous portion of a street or right-of-way.

Off-Tract Drainage Easement

A legally recordable instrument granting to the developer or his successors in interest the right to discharge collected waters upon lands exterior to the site being developed.

Off-Site Improvements

Improvements to county facilities, including, but not limited to, traffic facilities, culverts, and bridges and other drainage facilities located outside of a given land development.

Off-Street Parking Area

An area providing vehicle parking spaces and aisles off the street or road right-of-way.

On-Site

Means located on the lot in question.

On-Site Storm Water Management Facility

A storm water management facility which controls or manages the storm water runoff from a single development site and which is located on the tract of land being developed.

On-Tract

Located on the property which is the subject of a development application or on a contiguous portion of a street or other right-of-way.

Open Space

Land or water areas to be retained in a largely natural or undeveloped state, for purpose of, among other things, providing parkland or green spaces, protecting ecologically sensitive areas, preserving flora and wildlife, or protecting and preserving areas of scenic, historic and cultural value, while at the same time affording, whenever practicable, public outdoor recreational opportunities for the County's residents. (N.J.S.A. 40:12-16)

Owner

Any individual, firm, association, syndicate, co-partnership or corporation having sufficient proprietary interest in the land sought to be subdivided to commence and maintain proceedings to subdivide the same under a municipal subdivision ordinance and this resolution.

Performance Guarantee

Means any security, which may be accepted by a municipality or county, including cash, provided that a municipality or county shall not require more than ten percent (10%) of the total performance guarantee in cash.

Preapplication Review

An informal review of a development application for the purpose of discussing its key elements and to identify County concerns early in the development process.

Preliminary Subdivision Plan

The preliminary subdivision plan indicating the proposed layout of the subdivision showing or being accompanied by all of the information required pursuant to these regulations.

Preliminary Subdivision Plan Amended

Means a change to an existing approved preliminary subdivision that requires action by the

Board.

Preliminary Site Plan

The development of a site plan of an existing lot or lots on which is shown all of the information required by the Preliminary Site Plan submission requirements of these regulations. The plan shall be drawn in compliance with the requirements of the Map Filing Act of New Jersey.

Public Road

Any right-of-way over which the public has the right to travel.

Required Improvements

Improvements which are necessitated by a land development proposal and whose completion must be guaranteed prior to final County approval being granted.

Resubdivision

Means (1) the further division or relocation of lot lines of any lot or lots within a subdivision previously made and approved or recorded according to law or (2) the alteration of any streets or the establishment of any new streets within any subdivision previously made and approved or recorded according to law, but does not include conveyances so as to combine existing lots by deed or other instrument.

Retention Basin

A basin or depression formed by the construction of a barrier or dam at a suitable location to retain storm water runoff and allow this water to percolate into the ground.

Reverse Frontage

The provision in the design of a land development allowing for lots contiguous to an abutting county road to front on an internal street and the lots shall not have direct access to said county road.

Right of Discharge

A legally recordable instrument granting to the developer or the County, the right to discharge collected water upon lands exterior to the development.

Right-of-Way

A strip of land acquired by reservation, dedication, required dedication, prescription or

condemnation and intended to be occupied by a road, crosswalk, railroad, electric transmission lines, oil or gas pipeline, waterline, sanitary storm sewer and other similar uses.

Road

Any street, avenue, boulevard, road, lane, parkway or freeway which is an existing state, county, or municipal roadway, or a street or way shown upon a plan heretofore approved pursuant to law and including the land between the right-of-way lines, whether improved or unimproved, and comprising all pavement, shoulders, gutters, curbs, sidewalks, parking areas and other improvements within the right-of-way lines.

Sight Easements

An area established in accordance with the requirements of this resolution, in which nothing shall be erected, placed, planted or allowed to grow in such a manner as to obstruct vision of traffic.

Siltation Basin

A temporary facility, designed in accordance with the standards of this resolution, to collect silt and eroded soil resulting from grading the area of a subdivision, for the purpose of limiting the deposit of silt and eroded soil in streams and brooks and on county roads.

Site Plan

Means a development plan of one or more lots on which is shown (1) the existing and proposed conditions of the lot, including but not necessarily limited to topography, vegetation, drainage, floodplains, marshes and waterways, (2) the location of all existing and proposed buildings, drives, parking spaces, walkways, means of ingress and egress, drainage facilities, utility services, landscaping, structures and signs, lighting, screening devices, and (3) any other information that may be reasonably required in order to make an informed determination pursuant to an ordinance requiring review and approval of site plans by the planning board adopted pursuant to Article 6 (C. 40:55D-37 et seq.) of the Municipal Land Use Act.

Sketch Plan

Means a preliminary set of documents and maps of sufficient accuracy to be used for the purpose of discussion between the applicant and county staff.

Solar Panels

Means an elevated panel or plate, or a canopy or array thereof, that captures and converts solar radiation to produce power, and includes flat plate, focusing solar collectors, or

photovoltaic solar cells and excludes the base or foundation of the panel, plate, canopy, or array.

Storm Water Facility

A structure and/or technique, which conveys, stores, and/or otherwise manages or controls storm water runoff. A storm water facility may be either a storm water management facility or a storm water conveyance or runoff flow facility, depending upon its purpose and function.

Storm Water Management Facility

A facility which attenuates, controls, or otherwise manages the quantity and/or enhances the quality of storm water runoff.

Storm Water Runoff

The portion of rainfall that floods at or near the ground surface and which affects the hydrologic and hydraulic design of storm water facilities.

Street

Means any street, avenue, boulevard, road, parkway, viaduct, drive or other way (1) which is an existing state, county or municipal roadway, or (2) which is shown upon a plan heretofore approved pursuant to law, or (3) which is approved by official action as provided by these regulations, or (4) which is shown on a plan duly filed and recorded in the office of the county recording officer prior to the appointment of a planning board and the grant to such board of the power to review plans; and may comprise pavement, shoulders, gutters, curbs, sidewalks, parking areas and other areas within the street lines.

Subdivider

Any individual, firm, association, syndicate, co-partnership, corporation, trust or any other legal entity commencing proceedings under the provisions of a municipal subdivision ordinance and this resolution to effect a subdivision of land for himself or for another.

Subdivision

Means the division of a lot, tract, or parcel of land into two or more lots, tracts, parcels or other divisions of land for sale or development. The following shall not be considered subdivisions within the meaning of these regulations, if no new streets are created: (1) divisions of land found by the planning board or subdivision committee thereof appointed by the chairman to be for agricultural purposes where all resulting parcels are 5 acres or larger in size, (2) divisions of property by testamentary or intestate provisions, (3) divisions of property upon court order, including but not limited to judgements of foreclosure, (4) consolidation of existing lots by deed or other recorded instrument and (5) the conveyance of

one or more adjoining lots, tracts or parcels of land, owned by the same person or persons and all of which are found and certified by the administrative officer to conform to the requirements of the municipal development regulations and are shown and designated as separate lots, tracts or parcels on the tax map or atlas of the municipality. The term "subdivision" shall also include the term "resubdivision".

Subdivision Application

Means the application for approval of a subdivision pursuant to the "Municipal Land Use Law" (1975) (P.L. 1975, C. 291) (C. 40:55D-1 et. seq. as amended and supplemented).

Traffic Impact Study

An analysis to determine how traffic generated by either new or replacement land use(s) will be served by an existing or future road network.

Water Course

Any natural swale, stream, brook or river which is the natural course of storm or running water through which water flows ordinarily and frequently but not necessarily continuously. This definition includes water courses which have been artificially constructed, realigned or improved.

Any word not defined in this section, please refer to the Municipal Land Use Law, the County Planning Act or the Uniform Site Improvement Standards.

CHAPTER III
SUBMISSION AND REVIEW PROCEDURES

A. PLAN SUBMISSION

1. Preapplication Review and Conferences

a. To expedite the review of applications and to promote compliance with County Land Use Regulations, the County Planning Board encourages a preapplication review of major development proposals. It is an opportunity for the developer and County agencies to discuss key elements of the plan and to identify issues of County concern early in the planning process.

Depending upon project scale, a team will be assembled consisting of planning and engineering staff members. A review will be scheduled to informally discuss key issues relevant to the project.

b. A fee will not be charged for informal preapplication reviews, and all recommendations are non-binding upon the County and the applicant.

2. Required Submissions

a. **Subdivisions**

All applications for subdivision of land within Warren County shall be submitted to the County Planning Board for review and/or approval prior to final approval by the appropriate municipal official or agency. Complete applications must be received two (2) weeks prior to the Warren County Planning Board's advertised meeting date in order to be considered at that month's meeting.

b. **Site Plans**

All site plans for land development, building foundations or change of use permits, must be submitted to the County Planning Board for review and/or approval excluding single family detached residential development. Review and/or approval is required for proposed commercial, industrial, and multi-family structures of five (5) or more units, or any other development requiring off street parking area producing surface runoff in excess of standards set forth in these regulations prior to the issuance of a municipal building permit.

The submission of a site plan may be required depending on the review of an application by a building permit official or Board of Adjustment involving land or structures fronting on an existing county road or a proposed county road

shown on the Official County Map or on the County Master Plan, adjoining other county lands or within 200 feet of a municipal boundary.

Complete applications must be received 14 calendar days prior to the Warren County Planning Board's advertised meeting date in order to be considered at that month's meeting.

Site plans for land development not along a county road that include less than one (1) acre of impervious surfaces are exempt from county site plan review. A site plan application not along a county road that increases the existing impervious surface coverage to one acre or more, or adds to existing impervious coverage of over one acre must be approved by the Planning Board, and subject to the appropriate review fees.

3. Submission Requirements

a. Subdivision and site plan applications may be submitted to the County Planning Board by the municipal official designated to receive such applications on behalf of the local planning board, or be submitted by the applicant or representative to the County Planning Board for review or approval. If submission is by applicant or representative, verification of submission of these maps to the municipality is required.

b. The following items shall be submitted with each development application:

(1) County Application Form (new applications only) [See Appendix C]

(2) Municipal Application Form (new applications only)

(3) Letter certifying the date plans were submitted to the municipality

(4) Highlands Council Notification – Preservation Area Only
In accordance with Section 17.b of the Highlands Act, "every person submitting an application for development in the preservation area shall be required to provide a notice of the application to the [Highlands} council…" in accordance with the procedures established by the Highlands Council. A copy of the notice submitted to the Highlands Council must be provided.

(5) Review Fee [See Appendix A]

(6) Plans: 3 complete sets. Each sheet of map set must be signed and sealed. One set must be either 24" x 36" or 30" x 42" in size. The other sets may be either the same size as the first set or they may be 81/2" x 13", 11" x 17", 18" x 24" or 15" x 21"

in accordance with the Map Filing Law.

(7) Completed Checklist [See Appendix B]

(8) Storm Water Management Report (1 copy) (All preliminary subdivision and site plan applications) [See Appendix E]

(9) Traffic Impact Study (1 copy) [See Appendix E]

(10) Prior to the unconditional approval of the final Major subdivision map, applicant must provide the latest revised subdivision map to the county in an AutoCAD format.

(11) Prior to the unconditional approval of a minor subdivision or Lot Line Adjustment the applicant must provide a PDF depicting the new lot lines.

(12) If applicable the county road and/or bridge improvement plans shall also be submitted on 4 mil mylar and AutoCAD format.

(13) All plans and documents submitted or resubmitted for review must be signed and contain the raised seal of the appropriate licensed professional

c. Drawn at such a scale that the cover sheet depicts the entire project plus 200 ft. in all directions around property boundaries. The cover sheet for each set of plans must be labeled for only the application associated with the project. No application will be accepted if it combines a subdivision and a site plan. Each application must stand on its own without sharing plans or documents with other applications.

d. Staff inspects and photographs the location of every subdivision application for consistency with submitted material. By making application to the County Planning Board, staff of the County Planning Department and Engineers Office have the authority to inspect and photograph the subject property as part of the Board review.

B. CLASSIFICATION OF PLAN AND LEVEL OF REVIEW AND APPROVAL

1. The County Planning Department shall review the plan for completeness and classify it into one of the following categories to apply the applicable review fee and level of review and approval.

a. General Development Plan (GDP)

A GDP is a comprehensive plan for the development of a planned development. Any developer who submits a GDP to a municipality should submit the same plan to the County Planning Board to ensure compliance with all county highway and bridge standards. A GDP that has been approved by a municipality without county review may not meet county standards and may need to be revised at the municipal level.

b. Full Planning Board Approval

1. Subdivisions

a. Preliminary Non-County Road Major Subdivision

b. Preliminary County Road Major Subdivision

c. Amended Preliminary Major after County Planning Board Approval

An application for an amended subdivision will be considered for approval by the County Planning Board if minor alterations are proposed from the original approved application and if applied for within 12 months of the original application approval. Minor revisions are those that do not affect county roads or county structures and do not increase the number of lots or square footage of the proposed development. If revisions are determined to be major in nature where county roads and facilities are affected then it will require a new application, fees, and studies as determined by the County Engineer's Office.

d. Non-County Road Minor

Non-county road subdivisions shall be reviewed by the County Planning Director and County Engineer, and if the subdivision, affects existing or proposed county roads, drainage systems, or open space or Morris Canal properties, the plan will be considered for approval by the County Planning Board at its regular meeting.

e. County Road Minor

f. Lot Line Adjustment

g. Amended Minor Subdivision after County Planning Board Approval

h. Final Major

1. Site Plans

a. Residential Non-County Road

b. Residential County Road

c. Non-Residential Non-County Road

d. Non-Residential County Road

e. Final

If municipality requires final site plans, they require the full approval of the County Planning Board.

f. Amended after County Planning Board Approval. An application for an amended site plan will be considered for approval by the County Planning Board if minor alterations are proposed from the original approved application and if applied for within 12 months of the original application approval. Minor revisions are those that do not affect county roads or county structures. If revisions are determined to be major in nature where county roads and facilities are affected then it will require a new application, fees, and studies as determined by the County Engineer's Office.

c. Review by Staff

1. Non-County Road Minor Subdivision/ Lot Line Adjustment: A subdivision does not affect county roadways or county drainage systems.

Non-county road minor subdivisions/ Lot Line Adjustment shall be reviewed by the County Planning Director and County Engineer, and if it does not affect county roads or drainage systems or the Morris Canal, notice of that review shall be forwarded to the municipal approving authority and the applicant and a report of all non-County road subdivisions that were reviewed will be made to the County Planning Board at its regular meeting.

2. Staff inspects and photographs the location of every site plan application for consistency with submitted material. By making application to the

County Planning Board, staff of the County Planning Department and Engineers Office have the authority to inspect and photograph the subject property as part of the Board review.

d. Exempt After Review

1. Site Plan: Site plans not located along a county road that include a total of less than one (1) acre of existing and proposed impervious coverage are exempt, except if a site uses an easement or non public road from a county road to access the site or is within 200' of a county bridge, or other county facility.

2. Review Fee Schedule

a. Fees will be charged for the review of subdivisions and site plans submitted to the County Planning Board. Cash will not be accepted. Checks shall be accepted and made payable to the "County of Warren". The appropriate fee will be in accordance with the fee schedule (see Appendix A) as adopted by the County Board of Chosen Freeholders.

b. If a plan has received county approval and is subsequently revised, it may require a resubmittal fee based on the extent of the revision.

c. Fees will be waived for applications submitted by municipalities, county agencies or Boards of Education.

3. Change in Classification

a. Any application submitted to the county (minor or major) that is reclassified by the municipality becomes null and void. A new county application with the correct municipal classification must be submitted and the fees adjusted appropriately.

C. REVIEW AND APPROVAL PROCEDURES

1. Completeness

a. All applications must be received 14 calendar days prior to the Warren County Planning Board's advertised meeting date and deemed complete in order to be considered for that month's meeting.

b. Each development application submitted to the Warren County Planning Board for review and/or approval under the Warren County Development Review Regulations shall not be deemed complete for purposes of commencing the time period for action until all information required in the Development Submission Checklist located in the appendix has been provided and deemed

complete by the County Planning Department.

c. If the submission is found to be incomplete, a letter will be issued within ten (10) business days to the applicant and the appropriate local authority. The report will identify those items required for the submission to be determined complete.

d. If the applicant fails to submit the missing required items within ninety (90) days, the Planning Department reserves the option to return all submission materials, thus voiding the application. This will not prejudice the County's right to future review of the development or the right to require the applicant to mitigate those impacts to county facilities which will result from the development. If a complete application is not submitted within the 90 day period the applicant will forfeit the base application fee submitted and will be refunded the calculated amount per new lot, dwelling unit, parking space and/or acre(s) of new impervious area.

e. Upon receipt of those items identified, the submission will be deemed complete for review.

f. The application shall include the required number of plan sets of the subdivision or site plan, the applicable review fee in accordance with the County Land Development Review Fee Schedule and all supporting documentation.

2. Departmental and Agency Review

a. **Planning Department**

The County Planning Department staff may review and comment on plans for consistency with the County Master Plan and its elements. The report will be completed in accordance with the provisions contained in Chapter IV.

b. **County Engineer**

(1) Once an application has been deemed complete and reviewed by the County Planning Department, the plans, along with all supporting documents and reports, will be transmitted to the Office of the Warren County Engineer for an engineering evaluation in accordance with the standards and criteria established in the Warren County Development Review Regulations and the Road & Bridge Design Manual.

(2) Following their review, the County Engineer's Office will issue a report which details requirements and/or recommendations to be included with the Planning Board's report. A comprehensive report, along with a

recommended County action, is then taken under consideration by the Development Review Committee. Once the Committee has agreed to the requirements, recommendations and actions, the report is placed on the Planning Board's agenda for the full Board to act on at its regular monthly meeting. The review process will then continue until all issues of county concern have been adequately addressed.

c. **Shade Tree Commission**

Any application for subdivision or site plan review, which is located on a county road and includes trees eight (8) inches or more in diameter in the County Right of Way, shall submit a plan to the Warren County Shade Tree Commission for their review and approval. The Shade Tree Commission issues a separate, independent report.

d. **Morris Canal Committee**

Any application for subdivision or site plan review, which is located within or adjacent to the Morris Canal, shall make note of this on the County's application form. Subdivision and site plan developments containing or adjacent to the Morris Canal must delineate and meet the design requirements in Appendix (D). Any towpath, canal prism, weir or remnant structure of the canal must be depicted on all subdivision and site plans. The subdivision and or site plan will be presented to the Warren County Morris Canal Committee for review and comment. The Committee's comments will be taken under consideration by the Development Review Committee. If the Committee agrees with the Morris Canal Committee's comments and recommendations, they will be included in the report to the Planning Board for action at its regular monthly meeting.

3. Appearance Before County Planning Board

a. Any applicant with a development application currently under review by the County Planning Board has a right to appear before the Board or its Development Review Committee. Applicants can appear in person or can be represented by an attorney or other appropriate licensed professional.

4. Time to Act

The County Planning Board shall report to the appropriate local authority, and others as determined in section 7 of this chapter, within thirty (30) days of receipt of a complete site plan or subdivision application. If the Board fails to report to the municipal approving authority within the thirty (30) day period, said application shall be deemed to have been approved by the Board unless, by mutual agreement between

the Board, and the municipal approving authority and with approval of the applicant, the thirty (30) day period shall be extended for an additional thirty (30) day period or other agreed upon length of time.

5. Types of Action Taken

Upon reviewing an application seeking Board approval, the Board may take one of the following three (3) actions:

a. **Approval**
Approve the application if it satisfies the requirements of the Board.

b. **Conditional Approval**
Approve the application with conditions if:

(1) The application is subject to specified conditions that must be fulfilled before the approval becomes effective. Typically conditional approvals are given if the applicant has not submitted the proper easements, deeds, etc., and/or the application needs revisions and the Board finds the revisions to be minor.

Conditional Approvals will be granted for a six (6) month period. The applicant shall have until the cutoff date of the sixth Planning Board meeting following the Planning Board's action of conditional approval to submit revisions. The cutoff date is 14 calendar days before the next planning board meeting. Should the applicant not submit any revisions by the said Planning Board meeting date, the application's conditional approval status shall expire. The conditional approval and the application will be deemed disapproved for any previous and/or new reasons. The applicant may request an extension and the time period needed to meet the conditions. The request may be in person at the Planning Board Meeting or through written request received prior to the cut off date of the planning board meeting. Extensions will be granted if the applicant demonstrates that he has made forthright attempts to address the conditions or demonstrates that he was unable to address the conditions because of reasons beyond his control. Extensions may be granted for a period of up to two subsequent Planning Board meetings (60 days). Upon disapproval, the application will then come under all requirements set forth in Chapter III C.5.c of the County Development Review Standards.

c. Disapproval
Disapprove the application if it does not meet all of the Planning Boards requirements and requires major revisions.

6. Resubmittal Procedures

a. The applicant has one (1) year from the disapproval date to resubmit for the reasons of disapproval. Any resubmission received more than one year from the date of disapproval shall be treated as a new application requiring the submission of a new application with applicable fees.

b. A written response and a map with revisions highlighted must accompany the application resubmission that explains how each reason for conditional approval or disapproval is addressed. Applications submitted that do not contain the written response and highlighted map may not be reviewed and will be returned to the applicant.

c. A resubmittal that substantially changes the application that is not a result of the County Planning Board's reasons for disapproval or conditional approval may be treated as a new application and new fee charged.

7. Notification of County Action

Action taken by the Planning Board on all development applications shall be set forth in writing. Copies of said report shall be mailed or delivered to:

a. The local agency having jurisdiction.

b. The municipal engineer.

c. The applicant (via certified mail).

d. The applicant's professional agents as provided by the applicant on the application form when submitted or amended.

e. The local building permit officer.

f. County Soil Conservation District.

g. Objectors to an application who are present or submitted written comments at the Planning Board meeting that action was taken (via certified mail).

8. Local Approval Prior to County Action or Approval

a. Each land development application shall be submitted to the County Planning Board for review and, where required, submitted simultaneously with the filing of its application with the local municipal approving authority which shall take one of the following actions:

(1) Defer taking final action on a subdivision application until receipt of the County Planning Board's report thereon.

(2) Approve the subdivision application subject to its timely receipt of a favorable report thereon from the County Planning Board. The municipal or other local agency or individual with authority to approve a land development plan or to issue a building permit shall defer action on any application requiring County approval pursuant to these regulations until the same shall have been submitted to the Board for its approval of the plan.

b. If a development application is approved by the local approving authority prior to final Board approval, the powers of the Board are not diminished. The Board and the County Engineer's Office have ultimate jurisdiction over any conditions contained within the municipally approved resolution which impact County road systems and storm water facilities or which otherwise fall within county review jurisdiction pursuant to all current statutes, regulations or ordinances.

9. Simultaneous Review of Multiple Submissions

a. The County Planning Board shall have the power to review, approve, withhold action or disapprove site plans and subdivisions simultaneously.

However, the Board requires that a separate application and plans be submitted showing:

(1) The proposed subdivision – Only the plan sheets necessary for the subdivision of the property will be accepted.

(2) The proposed site plan – Only the plan sheets necessary for the site plan of the property will be accepted.

b. The County Planning Board will not accept combination subdivision and site plan applications. Each application must be submitted independent of the other application.

10. Review and Approval of Phased Development Applications

a. The Board shall have the power to act on a specific phase of a development based on previous county action on previous phases of the same development. The Board shall be assured that previous phases have met all requirements of these regulations if necessary. The Board may not act on or may disapprove

future phases until all previous conditions have been fulfilled, unless a determination is made that there will not be an impact on any county facility.

11. Changes to Plans After Approval

a. All preliminary and/or final approvals issued by the County Planning Board in conjunction with the County Engineer's Office are based upon the facts as presented in the plans and supportive documents submitted at the time of application. Any modification of the aforesaid facts may alter, modify and/or affect the basis of the approval previously granted.

Therefore, any changes made to plans or documents after the date of county approval must be submitted to the Board for affirmation of the prior approval. The failure to submit revised plans as required will result in the Board's approval being voided and will require that such application be reapproved by the County Planning Board.

b. At times changes are made to approved maps that may be considered insignificant. Insignificant changes may be additional notes, labeling, or other very minor changes that do not affect the basis for plan approval. These plans will be reviewed by county planning and engineering staff, stamped and signed. For final subdivisions, these changes should be presented to the County Planning Dept. for action prior to certification for filing with the County Clerk as described in section 13.

c. It is acknowledged that, on occasion, due to unforeseen site conditions, minor deviations to the approved plans are necessary. However, all deviations as they affect improvements under county review jurisdiction must be reviewed by the licensed professional representing the applicant and having design responsibility. If it is determined that said deviations are of a nature which would warrant further county review, revised plans are to be submitted to the Board for review and approval. All other deviations to approved plans under county review shall be itemized in correspondence from the applicant's engineer to the Board.

d. If during construction, deviations to plans for improvements under county review, which have not been approved or accepted by the County Engineer, will void any previous county approval.

12. Effect of County Approval and Extensions

a. When action is taken by the County Planning Board, the general terms and conditions of approval shall be valid for the same period of time as the municipal plan approval in accordance with the Municipal Land Use Law 40:55D-49. However, all rights conferred by this action shall expire if, in the case of a subdivision, the plan has not been duly recorded in accordance with

procedures established in N.J.S.A. 46-23 et seq.

13. Certification of Final Subdivision for Filing with County Clerk

a. The Warren County Clerk shall not accept for filing any subdivision plan unless it bears certification of either approval or of review of the County Planning Director indicating compliance with the County Planning Act and the Warren County Development Review Regulations. The County Clerk requires 2 original mylars and 1 paper for their records. All maps must have original signatures before the County Planning staff will stamp and sign the maps for filing with the County Clerk.

b. It is the responsibility of the applicant or designee to contact the Warren County Planning Department in advance to arrange for an appointment with the appropriate personnel for final map signing. Planning Department personnel shall have the discretion to refuse or delay signing of the maps on that specific day.

c. Maps and plans and any proposed land developments shall be in accordance with the "New Jersey Map Filling Act" N.J.S.A. 46:23-et seq.

d. All information presented on the map for filing must be identical to the final subdivision map approved by the County Planning Board. The Director of the Warren County Planning Department or staff representatives will review maps and verify for compliance with the approved final submissions. If maps are not identical to approved final submission, maps will not be signed unless the differences are minor. Minor changes from the final approved plan may be accepted if the changes are the result of the municipal engineer correcting or adjusting map details, provided the changes do not alter stormwater drainage or occur within the county right-of-way.

e. Once maps are signed, the applicant or their designee shall be responsible for properly filing maps with the Warren County Clerk's Office.

D. SANCTIONS FOR NONCOMPLIANCE

1. Failure to comply with any of the conditions of county subdivision or site plan approval may be grounds for any or all of the following actions:

a. Refusal of the County to issue other county permits for said subdivision or site development.

b. A request to the local building inspector to revoke or to withhold the local building permit and/or certificate of occupancy.

c. Appropriate court action initiated by the County Planning Board.

2. A written notice of non-compliance shall be forwarded, by certified mail, to the local approving agency, the local building permit officer and the applicant. Said notice shall contain a statement regarding the applicant's lack of compliance and that such failure to comply may result in the County taking any or all of the actions enumerated above. Said notice shall also inform the applicant that immediate compliance is required.

E. WAIVERS AND APPEALS

1. The rules, regulations and standards set forth herein are designed to meet the necessary requirements of public safety and welfare of the citizens of Warren County. In the event that compliance with the rules, regulations and standards results in a unique hardship to the applicant, the applicant may seek a waiver. Requests for waivers must be made in writing and will be considered by the Planning Director, County Engineer, and/or County Planning Board as appropriate.

2. Any person, aggrieved by the action of the County Planning Board, may file an appeal in writing to the Board of Chosen Freeholders within ten (10) days after the date of notice by certified mail to said action. The Board of Chosen Freeholders shall consider such appeal at a regular or special public meeting within forty-five (45) days from the date of its filing. Notice of said hearing shall be made by certified mail to the applicant and to such other officials as set forth in R.S. 40:27-6.9 at least ten (10) days prior to the hearing. The Board of Chosen Freeholders shall render a decision within thirty (30) days from the date of the hearing.

CHAPTER IV
DEVELOPMENT DESIGN REQUIREMENTS

A. WARREN COUNTY HIGHWAY AND BRIDGE STANDARDS

The Warren County Highway and Bridge Standards were developed as a separate document (included in appendix E) to be used in conjunction with the Development Review Regulations.

The current Warren County Highway and Bridge Standards as well as all future revisions, are hereby made a part of these regulations and shall be followed for all development review by the County of Warren.

B. COORDINATION WITH MUNICIPAL STANDARDS

County recommendations are not intended to supercede local regulations in areas which are totally municipal jurisdiction. Every effort will be made to assist the applicant in the coordination of county and municipal requirements so that a development plan that is mutually beneficial to all parties involved and to the citizens of Warren County.

C. STATE OF NEW JERSEY REGULATIONS

It is the applicant's responsibility to obtain all required state approvals for their project. The County may advise the applicant of the need for state permits when applicable. The County may request a copy of State approvals when appropriate.

D. MORRIS CANAL PRESERVATION STANDARDS

The Warren County Morris Canal Historic District Zone Ordinance (included in appendix D) was developed by the County as a guide for municipalities to review and adopt into their development regulations. By creating this ordinance, all municipalities along the canal would have a common guide to development so as to protect this historic resource.

CHAPTER V
CONSISTENCY WITH OTHER COUNTY PLANS, PROGRAMS AND POLICIES

A. WARREN COUNTY MASTER PLAN

Pursuant to Section 40:27-2 of the New Jersey County Planning Act, the Warren County Planning Board has adopted the Warren County Master Plan. The Master Plan is a compendium of elements consisting of, but not limited to, the general development plan, the transportation plan and open space plan. The master plan is designed to provide a frame of reference for all county and local activities so that the county develops economically, aesthetically and in an environmentally sensitive fashion in accordance with sound planning and land use principles.

Proposed land developments in the county should be in conformance with the policies in the master plan. The County Planning Board may outline areas of inconsistencies in the county's development review report, or a separate report, for consideration by the municipality and the applicant.

B. HISTORIC IMPACT REVIEW

The *New Jersey Register of Historic Places* is the official list of New Jersey's Cultural Resources. The Register was created by the New Jersey Register of Historic Places Act of 1970 (NJSA 13:1B-15.128 et seq.). The Act prohibits any state, county or municipal activity which encroaches upon a site or district on the Register without application and prior written authorization of the Commissioner of the New Jersey Department of Environmental Protection.

Therefore, applicants of projects which require road and/or drainage improvements which impact sites on the *New Jersey Register of Historic Places* under jurisdiction of the County and in conjunction with land development proposals submitted pursuant to these regulations, shall submit an application to the State Historic Preservation Office (SHPO) for project authorization under the Act.

If the project is approved as outlined in the project application by the SHPO or Historic Site Council, the construction of improvements under county jurisdiction may commence provided all County Planning Board and municipal requirements have been fulfilled.

C. OUTSIDE AGENCY REVIEW

All applications are reviewed to determine if any elements thereof can possibly be within the jurisdiction of outside review agencies. Such agencies include, but are not limited to, the New Jersey Department of Environmental Protection, the New Jersey Department of Transportation, and the Warren County Soil Conservation District.

In the event that one or more of these agencies does have review jurisdiction, the County Planning Board may exercise an option to withhold final action until such time as the application has been found in compliance with all statutory and regulatory requirements.

Copies of the County Planning Board reviews will be transmitted to all concerned agencies. Timely comments resulting from outside agency reviews will be considered in County Planning Board actions.

APPENDIX A

Subdivision and Site Plan Fee Schedule

General Procedure

Every application subject to approval by the Warren County Planning Board and the provisions of the development review standards shall not be deemed complete unless and until the fees as hereinafter enumerated have been paid. In the event that it should be determined that the initial fee paid by an applicant is not in accordance with this fee schedule, the Planning Board may withhold final approval unless and until such fees are paid in full. All monies paid on account of fees pursuant to this schedule shall be paid to the County Treasurer. Proof of payment of the fees shall be appended to the application prior to its review by the Warren County Planning Board. Unless the Planning Board determines that the fee has been incorrectly calculated, no additional fee for an original application shall be required for a period of one (1) year beginning with the date of payment of same. There shall be no fee for review of development applications of any political subdivision of the State of New Jersey.

Fee Schedule

Non-Binding Review

Pre-application Review	No Review Fee
Sketch Concept Major	No Review Fee
General Development Review	$500

Full Planning Board Approval

Subdivisions

Preliminary Non-County Road Major	$350.00 +$20.00 Per New Dwelling Unit
Preliminary County Road Major	$350.00 + $40.00 Per New Dwelling Unit
Amended Preliminary Major After Planning Board Approval	$200.00
Non-County Road Minor	$50.00
Minor Lot Line Adjustment	$50.00

County Road Minor	$100.00
Amended Minor Subdivision after County Planning Board Approval	$50.00
Final Major	$200.00

Site Plan

Residential Non-County Road (Preliminary)	$350.00 + $20.00 per new Dwelling Unit
Residential Non-County Road (P/F)	$700.00 + $20.00 per new Dwelling Unit
Residential County Road (Preliminary)	$350.00 + $40.00 per new Dwelling Unit
Residential County Road (P/F)	$700.00 + $40.00 per new Dwelling Unit
Non-Residential Non-County Road (Prelim)	$350.00 + $6.00 per new parking space or $400.00 per acre of new impervious area (whichever is greater)*
Non-Residential Non-County Road (P/F)	$700.00 + $6.00 per new parking space or $350.00 + $400.00 per acre of new impervious area (whichever is greater)*
Non-Residential County Road (Preliminary)	$350.00 + $10.00 per new parking space or $400.00 per acre of new impervious area (whichever is greater)*
Non-Residential County Road (P/F)	$700.00 + $10.00 per new parking space or $350.00 + $400.00 per acre of new impervious area (Whichever is greater)*
Final	$350.00
Amended Site Plan after Planning Board Approval	$200.00 + adjusted parking space fee or impervious area fee (whichever is greater)*
Exempt after Review	No review fee

* All impervious area calculations will be rounded up to the next full acre when determining fees.

APPENDIX B

Development Review Regulations Checklist for Development Applications

APPENDIX C

Warren County Planning Department Application Form

APPLICATION CAN BE FOUND ONLINE AT

www.co.warren.nj.us/Planning/includings/LAND_DEVELOPMENT_APPLICATION_REV-2007.pdf

APPENDIX D

Morris Canal

Appendix D

MORRIS CANAL HISTORIC PRESERVATION REQUIREMENTS

A. Purpose: The preservation, protection and enhancement of the Morris Canal is required because:

1. The Morris Canal is recognized as a cultural resource of National importance by it's inclusion on the State and National Register of Historic Places, and

2. The Morris Canal was (and is) of great significance to the social and economic development of Warren County and the individual municipalities through which it passes and is so recognized by it's inclusion in Warren County's Open Space Plan, and

3. The Morris Canal is of environmental importance as a drainage way, water retention basin and, in many cases, as part of a valuable natural area watersheds.

4. Temporary restoration easements may be necessary as part of the buffer areas or in place of the buffer areas.

B. Delineation Requirements of Canal Corridor and Buffer: The delineation of the Morris Canal corridor on all subdivision and site plan maps must include:

1. The Canal right-of-way, levels, prism, basins, locks and inclined planes.

2. Adjacent features, sites and structures, such as boat yards, of primary importance to the operation of the Canal.

3. Areas of special sensitivity within the zone, including but not necessarily limited to special features, such as the inclined planes, locks, boat basins and yards, shall be designated.

4. A one-hundred (100) foot buffer along both sides of the Canal corridor measured from the outside toe of the prism bank, basin, lock or inclined plane, as the case may be, to facilitate the establishment of the Canal greenway, to minimize the impact of encroachments on the Canal, and to minimize potential conflicts between the public using the Canal and private landowners.

C. Provisions for Driveways, Underground Utilities, Sanitary and Storm Water Sewers, Streets, Etc:

The crossing of and/or excavation within the Canal corridor for any of the above mentioned purposes shall be permitted if there is no feasible and prudent alternative and such crossing and/or excavation is clearly in the public interest. Provisions for such crossing/excavation shall

include:

1. For utilities and sewers. Work to be completed in such a manner as to minimize the disturbance and/or destruction of significant features both above and below ground. Any such features disturbed and/or destroyed shall be restored to their preexisting condition as closely as is feasibly possible.

2. For driveways, work to be completed with minimum disturbance and/or destruction of significant features, both above and below ground; with restoration of destroyed or disturbed significant features, and completed to insure proper drainage flow.

3. For minor and major subdivision application, and for individual applications, where multiple driveways would normally be permitted, only one common driveway crossing the Canal corridor shall be permitted. The provision of more than one driveway may be permitted if the applicant can demonstrate that a single common driveway is not feasible.

4. For major subdivisions where one or more streets are proposed to cross the Canal corridor, a bridge shall be provided to carry the roadway over the Canal prism. The same shall be required of a minor subdivision if deemed by the Planning Board to be appropriate and in the public interest.

D. Acquisition Procedures

1. The value of Morris Canal properties, easements, and buffers shall be established using NJDEP Green Acres procedures and requirements.

2. The County prefers fee title ownership of the canal property and buffers as part of a linear historic park corridor and trail system.

3. Donations of canal property and easements may be considered to offset other impact fees and responsibilities on a case by case basis.

4. Morris Canal Public Access Easements must be clearly labeled on all plans and must be delineated in all deeds by a metes and bounds description.

E. Conservation Easements/Public Access Easements:

1. Owners of property within the delineated Canal corridor shall be encouraged to donate conservation easements to the County.

2. Major and minor subdivision and site plan applicants shall be requested to designate conservation easements of the Canal corridor on the plans for the property being developed and to donate such easements to the County. Where practical, public access should also be granted.

3. Applicants for subdivision and site plan approval shall also consider the sale of the Canal corridor and buffer as defined in Section B, to the County.

F. Review Procedures:

The Planning Board shall review and comments in regard to the compliance with the provisions of this section.

CONSERVATION EASEMENT

THIS INDENTURE, made this _____(day)_____ day of ___(month)_____, ___(year)_____, BETWEEN, ___(owner/corporation)____, a corporation of the State of _____ (hereinafter referred to as the Grantor), AND the COUNTY OF WARREN, a public corporation of the State of New Jersey (hereinafter referred to as the County);

WHEREAS, the Grantor is the owner of lands in the ___(Twn., Boro, Twp)____ of _____ (hereinafter referred to as the __(Twn., Boro, Twp.)_____) which are the subject of approval for a __(subdivision/site plan)_____ by the Planning Board of the __(Twn., Boro, Twp.)____, Block _____, Lot(s) _____ on the Tax Assessment Map of the __(Twn., Boro, Twp.)____; and

WHEREAS, one abandoned canal bed and other environmentally sensitive areas are located on said lands adjacent to or near said lands; and

WHEREAS, the Grantor and the County wish to protect the natural conditions of said abandoned canal and said stream or streams and other areas and the quality of the waters of said canals or said streams from adverse effects from the future development of the property.

WITNESSETH

In consideration of One Dollar ($1.00) paid to the Grantor by the County at or before the delivery of this grant of easement, the receipt of which is hereby acknowledged, the Grantor hereby grants, bargains, sells and conveys to the County forever a conservation easement over that tract, parcel or lot of land in the __(Twn., Boro, Twp.)_____ of _____, County of Warren and State of New Jersey, more particularly described on Schedule A annexed hereto in the location described on Schedule B annexed hereto, on the following terms and conditions:

1. There shall be no residential structures or accessory structures thereto in the area designated as conservation easement, except for drainage purposes, agricultural or farming structures.

2. Notwithstanding anything to the contrary contained in this instrument, there shall be allowed, subject to federal and state law or regulation, drainage facilities and any related structures and accessways.

3. No trees or shrubs shall be removed or destroyed except for:

   (a) The purposes allowed herein.

   (b) Diseased or storm damaged trees or shrubs needed to be removed in accordance with accepted horticulture or silvaculture practices.

4. No topsoil, sand, gravel, loam, rock or other material shall be excavated, dredged or removed from the easement area except for the purposes allowed herein or except with the written approval of the County acting through the governing body or such other body or official as the governing body may designate.

5. No filling of land shall be allowed except for purposes allowed herein or as allowed by the Corps, and no dumping or placing of trash, waste or unsightly or offensive material, for disposal or otherwise shall be permitted within the easement area.

6. No solid or liquid materials which might pollute or otherwise adversely affect the flow or quality of the water in any watercourse within the easement area shall be kept or stored within the easement area or placed in or discharged into any watercourse traversing the easement area.

7. No activities shall be permitted within the easement area which might be

detrimental to drainage, flood control, springs, water, conservation, water quantity or quality protection, erosion control, or soil conservation.

8. Notwithstanding the foregoing, this agreement may be modified by mutual consent of the Grantor and or the Grantor's assigns and the County of Warren.

9. The provisions of this Indenture shall be binding upon and shall inure to the benefits of the parties and their respective heirs, successors and assigns.

IN WITNESS WHEREOF, the Grantor has duly executed this Indenture as of the date first above written.

WITNESS: _____(Owner)_____

_____ _____

___(name)_____, ___(title)_____ ___(name)_____, ___(title)_____

STATE OF _____: COUNTY OF _____: SS. _____

I CERTIFY that on this __(day)_____ day of ___(month)_____, ___(year)_____, ___(name)_____ personally came before me and this person acknowledged under oath, to my satisfaction that (a) this person is the ___(title)_____ of __(owner/corporation)_____, the corporation named in this document; (b) this person is the attesting witness to the signing of this document by the proper corporate officer who is __(name)_____, ___(title)_____; (c) this document was signed and delivered by the corporation as its voluntary act duly authorized by a proper resolution of its Board of Directors; (d) this person knows the proper seal of the corporation which was affixed to this document; (e) this person signed this proof to attest to the truth of these facts.

_____

__(name)_____, __(title)_____

Subscribed and Sworn to:
Before me this _(date)__ day

of _(month)___, ___(year)___:

_____
____(notary public)____

CONSERVATION EASEMENT
(with right to public access)

THIS INDENTURE, made this _____(day)_____ day of ___(month)_____, ___(year)_____, BETWEEN, ___(owner/corporation)____, a corporation of the State of _____ (hereinafter referred to as the Grantor), AND the COUNTY OF WARREN, a public corporation of the State of New Jersey (hereinafter referred to as the County);

WHEREAS, the Grantor is the owner of lands in the ___(Twn., Boro, Twp)____ of _____ (hereinafter referred to as the __(Twn., Boro, Twp.)_____) which are the subject of approval for a __(subdivision/site plan)_____ by the Planning Board of the __(Twn., Boro, Twp.)____, Block _____, Lot(s) _____ on the Tax Assessment Map of the __(Twn., Boro, Twp.)____; and

WHEREAS, one abandoned canal bed and other environmentally sensitive areas are located on said lands adjacent to or near said lands; and

WHEREAS, the Grantor and the County wish to protect the natural conditions of said abandoned canal and said stream or streams and other areas and the quality of the waters of said canals or said streams from adverse effects from the future development of the property.

WITNESSETH

In consideration of One Dollar ($1.00) paid to the Grantor by the County at or before the delivery of this grant of easement, the receipt of which is hereby acknowledged, the Grantor hereby grants, bargains, sells and conveys to the County forever a conservation easement over that tract, parcel or lot of land in the __(Twn., Boro, Twp.)_____ of _____, County of Warren and State of New Jersey, more particularly described on Schedule A annexed hereto in

the location described on Schedule B annexed hereto, on the following terms and conditions:

1. There shall be no residential structures or accessory structures thereto in the area designated as conservation easement, except for drainage purposes, agricultural or farming structures.
2. Notwithstanding anything to the contrary contained in this instrument, there shall be allowed, subject to federal and state law or regulation, drainage facilities and any related structures and accessways.
3. No trees or shrubs shall be removed or destroyed except for:
   (c) The purposes allowed herein.
   (d) Diseased or storm damaged trees or shrubs needed to be removed in accordance with accepted horticulture or silvaculture practices.
4. No topsoil, sand, gravel, loam, rock or other material shall be excavated, dredged or removed from the easement area except for the purposes allowed herein or except with the written approval of the County acting through the governing body or such other body or official as the governing body may designate.
5. No filling of land shall be allowed except for purposes allowed herein or as allowed by the Corps, and no dumping or placing of trash, waste or unsightly or offensive material, for disposal or otherwise shall be permitted within the easement area.
6. No solid or liquid materials which might pollute or otherwise adversely affect the flow or quality of the water in any watercourse within the easement area shall be kept or stored within the easement area or placed in or discharged into any watercourse traversing the easement area.
7. No activities shall be permitted within the easement area which might be detrimental

to drainage, flood control, springs, water, conservation, water quantity or quality protection, erosion control, or soil conservation.

8. Except for unusual and unforeseen emergencies, the easement area shall be open to the public all year during designated hours. The opening and closing hours shall be posted at the entrance to the easement area for public information and shall be determined from time to time by resolution of the Warren County Board of Chosen Freeholders or designated agency.
9. The County reserves the right to create and maintain a footpath along the course of the easement including, where necessary, the removal of trees and other vegetation that impede the footpath course.
10. Public access to the easement area shall only occur once a park program has been established by the County in order to oversee the usage of the easement area by the public.
11. Notwithstanding the foregoing, this agreement may be modified by mutual consent of the Grantor and or the Grantor's assigns and the County of Warren.
12. The provisions of this Indenture shall be binding upon and shall inure to the benefits of the parties and their respective heirs, successors and assigns.

IN WITNESS WHEREOF, the Grantor has duly executed this Indenture as of the date first above written.

WITNESS: _____(Owner)_____

_____ _____

___(name)_____, ___(title)_____ ___(name)_____, ___(title)_____

STATE OF _____: COUNTY OF _____: SS. _____

I CERTIFY that on this __(day)_____ day of ___(month)_____, ___(year)_____, ___(name)_____ personally came before me and this person acknowledged under oath, to my satisfaction that (a) this person is the ___(title)_____ of __(owner/corporation)_____, the corporation named in this document; (b) this person is the attesting witness to the signing of this document by the proper corporate officer who is __(name)_____, ___(title)_____; (c) this document was signed and delivered by the corporation as its voluntary act duly authorized by a proper resolution of its Board of Directors; (d) this person knows the proper seal of the corporation which was affixed to this document; (e) this person signed this proof to attest to the truth of these facts.

_____
__(name)_____, __(title)_____

Subscribed and Sworn to:
Before me this _(date)__ day
of _(month)___, ___(year)___:

_____
____(notary public)____

APPENDIX E

Warren County Highway and Bridge Standards

WARREN COUNTY

HIGHWAY AND BRIDGE

STANDARDS

Revised: September 9, 2010

N:\08 Standards & Regulations\Highway & Bridge Stds\Highway And Bridge Standards-New.Doc

WARREN COUNTY

HIGHWAY AND BRIDGE STANDARDS

SECTION 1 - TITLE, PURPOSE AND APPROVING AUTHORITY

1.01 Title 5
1.02 Purpose 5
1.03 Approving Agency 5
1.04 Disclaimer 5
1.05 Repeal Of Conflicting Regulations 5
1.06 Validity 5
1.07 Effective Date 5

SECTION 2 - DEFINITIONS AND ABBREVIATIONS 6

SECTION 3 - DESIGN STANDARDS - GENERAL

3.01 County Master Plan 8
3.02 Topographic Surveys 8
3.03 Wetlands Protection 8
3.04 Water Quality Protection 8
3.05 Carbonate Bedrock Areas 8

SECTION 4 - ROAD AND BRIDGE PLANS, CROSS-SECTIONS, PROFILES AND DETAILS

4.01 General Plan Requirements 9
4.02 Roadway Plans 9
4.03 Bridge And Culvert Plans 9

SECTION 5 - TRAFFIC IMPACT STUDY

5.01 Purpose 9
5.02 Submission Criteria 10
5.03 Study Content 10
5.04 Study Area 11
5.05 Description Of Development And Study Area 11
5.06 Existing Traffic Conditions 11
5.07 Projected Traffic Conditions 12
5.08 Traffic Analysis 13
5.09 Improvement Analysis And Mitigation Requirements 14
5.10 Financial Contributions For Road And Bridge Improvements 14

SECTION 6 - STORMWATER MANAGEMENT AND WATER QUALITY

6.01 General 17
6.02 Water Quality Control 18
6.03 Detention-Retention Basins 18
6.04 Infiltration Techniques 22

SECTION 7 - ROAD IMPROVEMENTS

7.01 Geometric Design Guidelines 24
7.02 Right-Of-Way And Easements 24
7.03 Access, Reverse Frontage And Marginal Service Roads 26
7.04 Off-Street Parking And Loading Areas 26
7.05 Pavement And Shoulder Construction 27
7.06 Road Intersections 28
7.07 Curbing And Sidewalks 31
7.08 Drainage Facilities 32
7.09 Signs 35
7.10 Traffic Stripes And Traffic Markings 36
7.11 Soil Erosion And Sedimentation Control 37
7.12 Shade Trees And Landscaping 38
7.13 Guide Rail 40
7.14 Maintenance And Protection Of Traffic 40

SECTION 8 - DRIVEWAY IMPROVEMENTS

8.01 General 42
8.02 Number Of Driveways 42
8.03 Driveway Locations And Sight Distance Requirements 42
8.04 Driveway Dimensions 43
8.05 Driveway Angle And Profile 44
8.06 Turning Lanes At Driveways 44
8.07 Drainage And Erosion Control 45
8.08 Construction 45

SECTION 9 - BRIDGE AND CULVERT IMPROVEMENTS

9.01 General 47
9.02 Design Criteria 47
9.03 Soils Investigations And Foundation Reports 48
9.04 Bridge And Culvert Types 48
9.05 Bridge Superstructure 49
9.06 Bridge Substructure 49
9.07 Precast Concrete Culverts 49
9.08 Parapets, Railings And Approach Safety Devices 50
9.09 Section Widths 50
9.10 Drainage 51
9.11 Utilities 59
9.12 Historic Districts 51
9.13 Submittals And Review 51
9.14 Permits 51
9.15 Right-Of-Way 52
9.16 Soil Erosion And Sediment Control 52
9.17 Maintenance And Protection Of Traffic 52

SECTION 10 - UTILITY IMPROVEMENTS

10.01 Above Ground Installations 52
10.02 Below Ground Utilities 53
10.03 Improvements At County Bridge And Culvert Locations 56
10.04 Right-Of-Way Management 56
10.05 Maintenance And Protection Of Traffic 57

SECTION 11 - HIGHWAY ACCESS AND CONSTRUCTION PERMIT

11.01 General 57
11.02 Application 58
11.03 Permit Fee 59
11.04 Plan Information 59
11.05 Construction Cost Estimate 60
11.06 Performance Guaranty 60
11.07 Inspection And Construction Administration Fees 60
11.08 Insurance 60
11.09 Underground Facilities Protection Act 62
11.10 Soil Erosion And Sediment Control Permit 62
11.11 County Shade Tree Permit 62
11.12 Construction And Inspection Procedures 62
11.13 As-Built Construction Plans 64
11.14 Maintenance Guaranty 65
11.15 Permit Duration And Extensions 65
11.16 Violations And Penalties 65

APPENDIX

1. Standards and Reference Material
2. Permit Fee Schedule
3. Permit Applications, Forms and Checklists
4. Sight Distance Requirements for Streets & Driveways (T3)
5. Typical Residential Driveway Detail (T4)
6. Typical Minor Driveway Detail (T5)
7. Typical Intersection/Major Driveway Detail (T6)
8. Minimum Desirable Typical Roadway Sections
9. Outlet Structure Detail
10. Standard Details List
11. Revisions Issued

SECTION 1 - TITLE, PURPOSE AND APPROVING AUTHORITY

1.01 TITLE

These standards and regulations shall be known as and may be cited as the "***Warren County Highway and Bridge Standards.***"

1.02 PURPOSE

The purpose of these standards and regulations is to provide guidance for the design of road and bridge improvements under County jurisdiction. Also, these regulations will establish the procedures and requirements for obtaining access to the County road, performing work within the County rights-of-way, and/or performing work which impacts a County bridge or culvert. These standards are intended to work in conjunction with municipal ordinances and regulations to provide a coordinate development process. Municipal regulations will apply to all development activities under municipal jurisdiction. The County reserves the right to apply municipal standards when appropriate to obtain the highest quality improvements possible.

1.03 APPROVING AGENCY

The provisions of these standards and regulations shall be administered by the Office of the County Engineer.

1.04 DISCLAIMER

The material in this standard has been prepared in accordance with generally recognized design and construction principals and practices. However, users should recognize that certain situations might require variation from these standards as established by sound engineering judgment. All modifications from these standards shall be subject to the discretion of the County Engineer.

Revisions and amendments to these standards will be issued periodically by the Warren County Engineer's Office. Before the design phase of any project is initiated, it is imperative the Warren County Engineer's Office be contacted in order to ascertain if any amendments have been issued.

1.05 REPEAL OF CONFLICTING REGULATIONS

All resolutions or regulations or parts thereof inconsistent herewith are hereby repealed.

1.06 VALIDITY

If any provision of these standards and regulations, or the application of such provision, shall be held invalid or declared invalid, the remainder of these standards and regulations shall remain in full force and effect.

1.07 EFFECTIVE DATE

These standards and regulations shall take effect upon approval by the Warren County Board of Chosen Freeholders.

SECTION 2 - DEFINITIONS AND ABBREVIATIONS

2.01 AASHTO: means American Association of State Highway and Transportation Officials.

2.02 Applicant: means any person, persons, partnership, association or corporation who make application for a permit or development.

2.03 ASTM: means American Society for Testing and Materials.

2.04 Board: means The Warren County Planning Board.

2.05 County Engineer: means the Warren County Engineer.

2.06 County: means the County of Warren.

2.07 Developer: means the legal or beneficial owner or owners of a lot or of any land proposed to be included in a proposed development, including the holder of an option or contract to purchase, or other person having an enforceable proprietary interest in such land. (MLUL).

2.08 Development: means the division of a parcel of land into two (2) or more parcels; the construction, reconstruction, conversion, structural alteration, relocation, or enlargement of any building or other structure, or of any mining excavation or landfill; and any use or change in the use of any building or other structure, or land, or extension of use of land, for which permission may be required per the Municipal Land Use Law (MLUL). Development shall also mean any construction, access or use activity which occurs within or impacts the County's rights-of-way or other property.

2.09 Engineer: means the Warren County Engineer.

2.10 HCM: means Highway Capacity Manual.

2.11 LOS: means Level of Service.

2.12 Major Driveway: means any driveway serving two hundred and fifty (250) or more vehicle trips per day to and from a site.

2.13 Minor Driveway: means any driveway not classified as a residential driveway and serving less than two hundred and fifty (250) vehicle trips per day to and from a site.

2.14 Residential Driveway: means any driveway serving three (3) or less single family residences.

2.15 MLUL: means Municipal Land Use Law.

2.16 MUTCD: means Manual on Uniform Traffic Control Devices for Streets and Highways.

2.17 NGVD: means National Geodetic Vertical Datum.

2.18 NJAC: means New Jersey Administrative Code.

2.19 NJSA: means New Jersey Statutes Annotated.

2.20 NJDEP: means New Jersey Department of Environmental Protection.

2.21 NJDOT: means New Jersey Department of Transportation.

2.22 NRSC: means National Resource Conservation Service (formerly Soil Conservation Service-SCS).

2.23 OSHA: means Occupational Safety and Health Administration.

2.24 Permittee: means any applicant who has been issued a permit and is obligated to fulfill all the terms and conditions of said permit.

2.25 Planning Board: means the Warren County Planning Board.

2.26 TDD: means Transportation Development District.

2.27 TID: means Transportation Improvement District.

2.28 Utility Opening (UO): means an excavation to repair an existing underground utility or a new house connection which does not cross a traffic lane.

SECTION 3 - DESIGN STANDARDS - GENERAL

3.01 COUNTY MASTER PLAN

The design of any development shall conform to the proposals and standards contained in the adopted County Master Plan or Official Map for County Road, Drainage, and/or Bridge Facilities and the standards and requirements contained in this regulation.

3.02 TOPOGRAPHIC SURVEYS

a. The developer shall provide a topographic survey and mapping of all areas impacting County road, drainage, and/or bridge facilities or other County properties.

b. Surveys in areas of proposed improvements to County road, drainage, and/or bridge facilities shall include in general the following unless directed otherwise by the County Engineer:

(1) Vertical datum – North American Vertical Datum (NAVD 1988)
(2) Horizontal datum - New Jersey State Plane Coordinate System 1983
(3) All planimetric features within twenty five feet (25') of the County right-of-way
(4) Contours at two foot (2') intervals
(5) Road centerline and right-of-way lines
(6) Property lines and property corners
(7) All utilities and drainage facilities with inverts
(8) All trees 8" diameter or greater within the County right-of-way
(9) Locations and limits of all historic districts, properties, and/or structures

3.03 WETLANDS PROTECTION

a. All wetlands within a project area which are required to be delineated to obtain the necessary NJDEP permits shall be located by survey and mapped on the plans.

b. Preservation of wetland resources and buffer areas shall be given a high priority in the design of all projects.

3.04 WATER QUALITY PROTECTION

a. All designs are encouraged to maintain natural vegetation and develop greenways adjacent to water courses for the purpose of non-point source pollution abatement and protection of aquatic and stream corridor habitats.

b. Water quality basins should be designed in accordance with the section titled “Water Quality Control”.

3.05 CARBONATE BEDROCK AREAS

Many areas of Warren County are underlain by solution-prone carbonate rocks (limestone, dolomite and marble) which pose unusual and complex problems in relationship to development activities. As such, these areas are quite sensitive to development improvements and may require special investigation, design and construction techniques to protect both the eventual property owner as well as those in the immediate surroundings. Municipal ordinances should be checked for development regulations and standards which govern all areas under municipal jurisdiction.

SECTION 4 - ROAD AND BRIDGE PLANS, CROSS-SECTIONS, PROFILES AND DETAILS

4.01 GENERAL PLAN REQUIREMENTS

a. All plans of County road, drainage, and/or bridge facilities and improvements will be prepared on a twenty four inches (24") x thirty six inches (36") sheet size. Mylar copies will be four (4) mil. AutoCAD diskettes of all information will be provided.

b. All plans of County road, drainage, and/or bridge facilities shall be kept together as a set within the plan submission.

4.02 ROADWAY PLANS

Roadway Plans in general will include:

a. Road improvement plans at a scale of 1"=20' or 1"=30'
b. Road profiles at a scale of Hor. 1"=20'/Vertical 1"=2' or Hor. 1"=30'/Vertical 1"=3'
c. Drainage profiles
d. Cross sections at a scale of 1"=5' at fifty foot (50') intervals. Cross sections should show existing and proposed grades, spot elevations, underground drainage and utilities, curbs, trees, poles and all other features which would affect design. Cross sections are to be field surveyed to 0.01 feet, not computer generated.
e. Details, tie sheet, and permanent benchmark locations with elevations in NAVD 1988
f. Contour and grading plan
g. Traffic control/detour, signing and striping plans
h. Soil erosion and sediment control plan and details
i. Complete 1"=20' scale plan showing all existing and proposed improvements, grades, and contours for new intersections.

4.03 BRIDGE AND CULVERT PLANS

Bridge and Culvert Plans in general will include:

a. General plan and elevation at a scale of 1/4"=1' (min.) showing two foot (2') contours and all necessary spot elevations
b. Typical sections and profile
c. Abutment plans
d. Superstructure and deck plans
e. Details, control points, and permanent benchmark locations with elevations in NAVD 1988
f. Traffic control/detour, signing and striping plans
g. Soil erosion and sediment control plan and details
h. All approach work will be in accordance with the roadway plans criteria above.

SECTION 5 - TRAFFIC IMPACT STUDY

5.01 PURPOSE

The purpose of the traffic impact study is to assess the effects that a particular development will have on the surrounding transportation network, to determine what provisions are needed for safe and efficient site access and traffic flow, and to establish a developer's fair share contribution for any necessary off-site improvements to county facilities.

5.02 SUBMISSION CRITERIA

a. Any subdivision or site plan along a County road which generates two hundred fifty (250) or more passenger car equivalent vehicle trips per day, to and from the site, must submit a Traffic Impact Study as part of the development application. This traffic volume would be typical of a twenty five (25) lot subdivision or a twenty three thousand (23,000) S.F. office building.

b. Any non-county road subdivision which generates five hundred (500) or more passenger car equivalent vehicle trips per day, to and from the site, must submit a traffic impact study as part of the development application. This traffic volume would be typical of a fifty (50) lot subdivision.

c. In determining the site generated traffic, the applicant shall use the trip generation process derived from the Institute of Transportation Engineers publication entitled *"6th Edition Trip Generation"*, or superseding edition.

d. Estimated truck traffic from a development shall be converted to a passenger car equivalent value. In determining the submission requirements and study area, the estimated truck traffic shall be multiplied by five (5) for the passenger car equivalent value. This multiplier is intended to give a conservative figure to account for errors in estimations and to provide for future growth. To determine the roadway level of service values and financial contributions, a passenger car equivalent valve in accordance with the "Highway Capacity Manual" shall be used.

e. No deductions shall be allowed for pass by or internal trips when determining the submission requirements.

5.03 STUDY CONTENT

a. The traffic impact study will include all of the following elements, as further described in these standards:

   (1) Description of development and study area
   (2) Existing traffic conditions
   (3) Projected traffic conditions
   (4) Traffic analysis
   (5) Improvement analysis and mitigation recommendations

b. The pages of the traffic impact study shall be numbered and the topics shall be addressed in the same sequence as they appear in this subsection. The study shall be completed and sealed by a New Jersey licensed professional engineer.

c. Whenever possible, data should be presented in tables, graphs, maps and diagrams for clarity and ease of review.

5.04 STUDY AREA

The area to be studied will vary with the quantity of site-generated traffic and its distribution to the existing roadway network. The study area is to encompass all County road segments and County road intersections where traffic generated by the development is expected to increase existing traffic volumes by 200 vehicle trips per day. The 200 vehicle trip per day volume is to include any calculated passenger car equivalent volume for truck traffic from a development. The applicant's engineer should seek guidance from the Office of the County Engineer prior to submitting the traffic impact study report to identify those critical intersections and roadway sections within the study area which deserve detailed analysis or other special attention. The County Engineer may limit the study locations and study area in those cases requiring excessive analysis.

5.05 DESCRIPTION OF DEVELOPMENT AND STUDY AREA

a. The Traffic Impact Study shall include a narrative summary describing the type of project; square footage by use (e.g. office, retail, medical, etc.), number of dwelling units, or other appropriate units to indicate the size of the project; location map(s); construction phasing; and the anticipated completion date(s) of the development. A brief description of major existing and proposed land developments within the study area (with anticipated dates of completion, where available) shall also be included. The applicant's Engineer should consult with the County and municipal planning departments to obtain available development information.

b. The study shall contain a description of the proposed internal transportation system. This includes internal vehicular, bicycle, and pedestrian circulation and all proposed ingress and egress locations.

c. The study shall describe the external transportation system within the analysis area. Major intersections in the study area shall be identified and sketched. All propose construction and traffic control changes shall be noted. High accident areas, as determined by municipal and/or County officials, shall be described.

5.06 EXISTING TRAFFIC CONDITIONS

a. Existing traffic conditions shall be measured and documented for all County roadways and intersections in the study area. Existing traffic volumes for average daily traffic, peak highway hour(s) traffic, and peak development-generated hour(s) traffic shall be recorded. Manual turn movement counts shall be conducted at all studied intersections, encompassing the peak highway and development-generated hour(s), and documentation shall be included in the report.

b. Traffic counts shall be conducted by the applicant or, if available, obtained from the County for locations within the study area for a typical weekday (Tuesday, Wednesday or Thursday). Count data shall be summarized by fifteen (15) minute intervals over a peak two (2) hour period from both A.M. and P.M. peak periods, and for a midday period if so directed by the County Engineer. During the count period, there shall be no conditions such as detours, accidents or inclement weather that could affect traffic volumes. Traffic counts shall not be taken on or near holidays or other special events when traffic may not be representative of average daily traffic conditions.

c. Additional traffic studies may be required depending on the proposed development size, type or location. This may include, but is not limited to, vehicle classification, traffic delay or speed

studies.

5.07 PROJECTED TRAFFIC CONDITIONS

a. Area Development

In establishing the base condition traffic volumes to be used for analysis, the applicant shall include the traffic generated by other major developments in the area that are approved or are likely to receive approval prior to the site build out year.

b. Trip Generation

For trip generation, applicants shall use the Institute of Transportation Engineers publication entitled *"6th Edition Trip Generation"* or superseding edition. For land uses not listed in this source or when an applicant believes these rates are not representative, the County may accept alternative evidence of representative rates. The trip generation shall be summarized in tabular form indicating the traffic quantity for each land use type. Where appropriate, an estimate of the anticipated truck traffic shall also be prepared and included.

c. Trip Distribution and Assignment

(1) For trip distribution, the procedure and rationale shall be documented. Trip tables for each land use on the lot shall be shown. The documentation shall tie the trip table to the data source, such as U. S. Census Journey to Work, marketing studies, or employment data. Where existing travel patterns are used for all or a component of the site's traffic, an explanation is required as to why the expected patterns are likely to replicate these existing patterns.

(2) The traffic assignment shall follow logically from the trip distribution. Any special conditions must be explained.

(3) Peak hour traffic volumes covering the analysis area shall be depicted graphically. They must identify site generated, existing, pass by and total traffic.

(4) Support shall be provided for any credits or reductions for pass by trips or mixed-use developments. Included shall be an explanation of how these trips are being captured and a demonstration that the existing traffic volume is high enough to support the rates used. Because of the highly judgmental nature of pass by trips, prior approval of pass by percentage rates should be obtained from the Office of the County Engineer.

(5) In the event of disagreements over trip distribution and assignment, the County's Transportation computer model, prepared using the Transplan computer program, shall be used to determine traffic distribution to the surrounding road network. The applicant shall pay for the County's consultant to run the computer model at the consultant's prevailing hourly rate.

d. Total Projected Traffic

Highway traffic volumes to be used for analysis shall be prepared for the build out year of the project or such other years as may be appropriate due to project phasing or programmed

highway improvements. The traffic volumes shall be determined by applying background traffic growth rates, available from County or State sources, to existing traffic counts. The traffic volumes shall represent the traffic volumes anticipated on the date of project completion, including area development and site generated traffic.

5.08 TRAFFIC ANALYSIS

a. Site Access

In addition to capacity analysis, the proposed site access points are to be evaluated for safety and impact to the existing roadway. Issues to be considered and discussed are available sight distance, existing speed limit, ability of through traffic to maneuver around left turning traffic, neighborhood impacts, service and delivery vehicle access.

b. Capacity and Level of Service

(1) The traffic impact study shall include a capacity analysis at each access point for the lot and for each study location identified in the study area.

(2) The procedures presented in the *"1994 Highway Capacity Manual"* (HCM), Special Report 209, or superseding issue, are to be used for capacity analysis. Capacity work sheets must be provided as an appendix to the traffic impact study. The County will accept calculations performed using computer software based on the HCM. The County preference is for McTrans software. Any deviation from the HCM accepted values shall be fully documented. Default values shall not be used when actual values are reasonably available or obtainable.

(3) Capacity and level of service impacts should be evaluated with and without development traffic and with and without any proposed transportation improvements for the build years. For phased developments, no-build analyses for latter phases are not to include traffic and improvements from earlier phases of the development.

(4) Capacity and level of service analysis for the no-build condition of future years shall be based on traffic signal timing which is possible with the existing traffic signal hardware and will be appropriate for the future year no-build traffic volumes. The capacity and level of service analysis for the build condition the build analysis may use traffic signal timing changes which are possible with the existing traffic signal hardware.

(5) Summary tables shall show, as appropriate to the type of analysis, volume, number of lanes, green time, volume to capacity ratio, delay, Level of Service (LOS), and reserve capacity for each lane group or movement on each approach. These tables shall facilitate comparison of build and no-build conditions, and of existing and improved configurations based on the LOS standards.

c. Traffic Safety

An evaluation of the development's impact on traffic safety shall be included for each intersection studied. This shall include as a minimum a review of past accident experience, determining existing sight distances, and anticipated impacts from the proposed development.

d. Signal Warrant Evaluation

Non-signalized intersections being studied shall be evaluated for signalization warrants based on the current "*Manual on Uniform Traffic Control Devices for Streets and Highways"* criteria. Care should be taken in evaluating these criteria as satisfaction of a warrant or warrants is not in itself justification for a signal. Final recommendations on signalization of County road intersections should be coordinated with the Office of the County Engineer.

5.09 IMPROVEMENT ANALYSIS AND MITIGATION REQUIREMENTS

a. Mitigation measures must be proposed for all studied County road segments, County road intersections, or turn movements at County road intersections that are projected to operate in the build condition at worse than LOS "C" and worse than the no-build condition. A condition will be considered "worse" if there is any increase to the ration of volume to capacity (v/c) for the studied location. Specific recommendations shall be included that will improve operations under the build conditions to a level not worse than the no-build conditions.

b. Mitigation measures must be proposed for all roads and intersections where additional traffic from a development is expected to significantly increase traffic accidents or compromise reasonable roadway safety.

c. Recommendations

Specific recommendations that are proposed to mitigate deficiencies shall include, but are not limited to, the following elements:

(1) Internal circulation and external road design
(2) Sight distance improvements
(3) Traffic signal installation or phasing/timing changes
(4) Roadway widening
(5) Traffic system management techniques
(6) Traffic channelization

All proposed physical roadway improvements shall be shown in sketches.

5.10 FINANCIAL CONTRIBUTIONS FOR ROAD AND BRIDGE IMPROVEMENTS

a. Any land development required to submit a traffic impact study per Section 5.02 of these standards, may also be required to pay a pro-rata fair share financial contribution towards the cost of constructing off tract improvements to the County highway system. These improvements may include roadway and structure widenings and reconstructions, intersection improvements, drainage improvements, traffic control measures, etc.

b. Those improvements along the applicant's lot frontage or those provided to accommodate site access shall be entirely the applicant's responsibility and are not considered in the fair share determination. Examples of this are widening of existing road frontage, acceleration and deceleration lanes for access points, road widening directly opposite a proposed intersection, left turn lanes which provide access to a site, and traffic signals located at the applicant's driveways or at a new access road.

c. Those improvements which are required to maintain a reasonable level of roadway safety shall

be the applicant's responsibility and are not considered in the fair share determination.

d. If a lot falls within the boundaries of a designated Transportation Development District (TDD), or a Transportation Improvement District (TID) established by a municipality and the development is subject to a fee assessment for County road improvements by that district, then the County shall only require financial contributions towards the cost of constructing capacity improvements to the County road system outside the district boundaries.

e. A fair share contribution shall be made for each intersection within the study area requiring mitigation, per section 5.09 of these standards. The contributions shall be based on the following formula:

$$C_D = C_I \frac{T_D}{T_T}$$

Where;
C_D = Development fair share contribution
C_I = Total estimated cost of improvements required to improve operations under the build condition to a level not worse than the no-build condition
T_D = Peak hour traffic from the development for all intersection approaches
T_T = Total projected peak hour traffic of all intersection approaches for build condition

f. A fair share contribution shall be made for each County road segment within the study area. These contributions shall be based on the following formula:

$$C_D = C_I \frac{T_D}{T_s}$$

Where;
C_D = Development fair share contribution
C_I = Total estimated cost of improvements required to improve operations under the build condition to LOS "C" or to improve the segment to the minimum desirable cross section per the Warren County Master Plan, whichever is greater.
T_D = Peak hour traffic from the development traversing road segment
T_s = Traffic capacity of the proposed roadway at level of service "C" or the total projected peak hour traffic traversing road segment for build condition (whichever is greater)

g. The estimated cost of improvements and fair share contributions shall be prepared by the County. These improvement costs may include:

(1) Survey and design of the improvement;
(2) Right-of-way appraisal and acquisition;
(3) Construction of the improvement;
(4) Management of the construction; and
(5) Environmental cleanup, permits and mitigation.

h. All contributions received will be placed in a fund to be used by the County for improvements within the study area. The County will set priorities for construction of the improvements based on all funds available.

i. Capacity improvements made to the County road system may be assessed to a development occurring after the improvements have been made. The assessment shall be determined based on the development's fair share proportion of traffic utilizing that location. The total assessed development contributions shall not exceed the actual costs incurred by the County for those improvements.

SECTION 6 - STORMWATER MANAGEMENT AND WATER QUALITY

6.01 GENERAL

a. Each land development submitted to the County Planning Board shall be reviewed by the County Engineer to establish requirements to prevent an adverse drainage condition relating to a County road or County drainage facility.

b. In an effort to relieve the adverse conditions realized during the peak period of storm water runoff, and to minimize the potential impact on downstream structures, no development requiring County Planning Board approval shall be developed so that the rate of the storm water runoff from storms of two (2) year, ten (10) year and one hundred (100) year frequencies is increased over the existing runoff condition of the site.

   Where properly sized detention facilities are unable to be constructed and the requirement for zero net increase in runoff as defined above cannot be adhered to, the developer shall be required to provide adequate drainage facilities in such a manner as to not overburden the County drainage facilities, and to share in the costs of improvements to existing County drainage structures and facilities requiring enlargement, modification or reconstruction as a result of the increase in runoff from the development. New facilities shall be designed to conform to accepted engineering standards and practice. To facilitate the review of proposed drainage facilities for a development, design calculations prepared by the developer's engineer shall accompany the development plan.

c. The stormwater management designs should also take into consideration the increased volumes of stormwater produced over time and the impact on downstream properties, especially where ponding may become a problem in low lying areas.

d. Calculations shall include computation of the drainage basin area(s) and the area(s) of the development and the percent of the total drainage basin area occupied by the development. Where the drainage from a development connects directly into an existing County storm drain or required facility to be installed within the County right-of-way, the developer's engineer shall submit hydraulic calculations for all storm drain pipelines, ditch cross sections, culverts and bridges which are part of or related to the development. Plans, profiles and a drainage area map, drawn to a convenient scale and adequately dimensioned, shall be submitted along with the calculations.

e. Calculations shall also include an analysis of all drainage basin subareas to ensure that any changes in peak discharges at all points of concentration in the subareas do not create an adverse condition on adjacent properties or downstream County facilities.

f. The design method for required drainage calculations affecting County facilities shall be according to the state of the art and subject to approval by the County Engineer.

g. County stormwater management requirements shall not supersede any municipal and/or State requirements having more restrictive provisions.

h. All contributions received will be placed in a fund to be used by the County for improvements within the study area. The County will set priorities for construction of the improvements

based on all funds available.

i. Detention and all other stormwater facilities shall conform to the New Jersey Department of Environmental Protection's Stormwater Management Rules, at NJAC 7:8-3.4. Design engineers shall also adhere to, when applicable, the stormwater design requirements in the following rules:

(1) "*Dam Safety Standard*", NJAC 7:20;
(2) "*Standards for Soil Erosion and Sediment Control*", NJAC 2:90-1;
(3) "*Flood Hazard Area Regulations*", NJAC 7:13-1.1;
(4) "*Freshwater Wetlands Protection Act Rules*", NJAC 7:7A;
(5) "*Residential Site Improvement Standards*", NJAC 5:21.

6.02 WATER QUALITY CONTROL

In order to enhance water quality of stormwater runoff, all stormwater management plans should provide for the control of a water quality design storm. The water quality design storm is defined as the one (1) year frequency NRSC Type III 24 hour storm or a one and one quarter inch (1¼") two (2) hour rainfall.

The water quality design storm should be controlled by one of the following practices:

a. In dry detention basins, provisions should be made to insure that the runoff from the water quality design storm is retained such that not more than ninety percent (90%) will be evacuated prior to thirty six (36) hours for all non-residential projects or eighteen (18) hours for all residential projects. The retention time can be reduced in any case which would require an outlet size diameter of three inches (3") or less. Therefore, three inch (3") diameter orifices are usually the minimum allowed.

b. In permanent ponds or Awet basins, the water quality requirements are usually satisfied when the volume of permanent water is at least three (3) times the volume of runoff produced by the water quality design storm.

c. Infiltration practices such as dry wells, infiltration basins, infiltration trenches, buffer strips, etc., may be used provided they produce zero runoff from the water quality design storm and allow for complete infiltration within seventy two (72) hours.

6.03 DETENTION-RETENTION BASINS

a. General Requirements

(1) In cases where retention or detention facilities are provided as a stormwater management device to meet the zero increase in rate provision, such facilities shall be designed in accordance with the New Jersey Administrative Code, Title 5, Chapter 21, "*Residential Site Improvement Standards*". Runoff greater than that occurring from the one hundred (100) year twenty four (24) hour storm shall be passed over an emergency spillway.
(2) To assure proper operation of detention and retention facilities, it must be demonstrated that stormwater runoff flows for the highest storm event to be controlled, will be conveyed to the detention facility. This may be through piping, swales, overland flow or other methods as appropriate for the site and as approved by the municipality. In the

design of detention facilities, an adequate collection system must be provided to convey the runoff flows from the design storm event to the facility.

(3) A subsurface soils investigation is to be performed at all basin sites, the results of which are to appear on the plans. The soils investigation shall show soil and groundwater conditions to a minimum depth of two feet (2') below the finished grade of the basin.

(4) Notice shall be given to the Warren County Engineer's Office forty eight (48) hours prior to the commencement of any construction of interest to the County.

(5) Where a project is to be developed in phases, detention facilities must be designed and constructed to control runoff at each phase of construction.

(6) The ownership and maintenance of any stormwater management facilities must be addressed and notations included on submitted plans.

(7) Minor site plans with one half acre or more of impervious cover are to have stormwater management. Gravel driveways and parking areas shall be considered as impervious cover. The impervious cover shall be cumulative for recurring site plans on the same property.

b. General Recommendations

(1) The minimum bottom slope of the basin should be two percent (2%) unless extraordinary site conditions prevent practical installation. In all cases, low flow channels may be required to convey small inflows to the basin outlet.

(2) Suitable lining should be provided at all points of inflow to the basin where erosion or scour may occur. Such lining should comply with the criteria contained in *"Standards for Soil Erosion and Sediment Control in New Jersey"* mentioned previously.

(3) Allowance for siltation should be provided for in determining available flood storage.

(4) The design dimensions of the detention basin should be maintained throughout construction unless it is to be used as a siltation basin during construction in the watershed. If so, it should be immediately returned to design dimensions following the completion of such construction.

(5) Detention Facilities in Flood Hazard Areas whenever practicable, developments and their stormwater detention facilities should be beyond the extent of the flood hazard area of a stream. When that is not possible, detention facilities shall be designed in accordance with New Jersey Department of Environmental Protection's standards and shall be subject to the agency's approval.

(6) Consideration should be given to develop stormwater management facilities which are both functional and attractive. Landscaping and design which blend in with the natural surroundings are encouraged. Basins areas can be designed to function also as park areas, wildlife areas, and development of additional wetlands resources.

c. Principal Outlet Recommendations

(1) To minimize the chance of clogging and to facilitate cleaning, outlet pipes should be at least six inches (6") in diameter. Similarly, riser pipes, if utilized, should be at least eight inches (8") in diameter. All pipe joints are to be watertight. In addition, trash racks and/or anti-vortex devices will be required, where necessary. All outlet structures should be designed to blend into the contour of the basin slope.

(2) Eight inches (8") thick anti-seep collars may be required along outlet pipes. Reinforcement steel should be number five (#5) bars at twelve inches (12 ") both ways with two inches (2") of cover on both faces (minimum).

(3) Where necessary, a concrete cradle should be provided for outlet pipes.

(4) All concrete structures should contain reinforcement steel. All construction joints should be watertight.

(5) Suitable lining should be placed upstream and downstream of principal outlets as necessary to prevent scour and erosion. Such lining conform to the criteria contained in "*Standards for Soil Erosion and Sediment Control in New Jersey*".

(6) The outlet structure should not discharge onto a public road unless it is connected directly to a storm sewer system with adequate capacity.

d. Emergency Spillway Recommendations

(1) Vegetated emergency spillways should have side slopes not exceeding 3 horizontal to 1 vertical (3 to 1).

(2) Emergency spillways not excavated from undisturbed soil should be suitably lined and comply with the criteria contained in "*Standards for Soil Erosion and Sediment Control in New Jersey*".

(3) Maximum velocities in emergency spillways should be checked based on the velocity of the peak flow in the spillway resulting from the routed Emergency Spillway Hydrograph. Suitable lining should be provided in accordance with the "*Standards for Soil Erosion and Sediment Control in New Jersey*".

(4) Emergency spillway overflow must be carried to a drainage course, watercourse or drainage system that has sufficient capacity for the 100 year storm frequency flow, and shall not discharge onto a County road. The County may agree to the detention basin being oversized to provide a minimum storage of one hundred fifty percent (150%) of the one hundred (100) year storm volume to address this situation.

e. Dams and Embankment Recommendations

(1) The minimum recommended top widths of all dams and embankments are listed below. These values have been adopted from the "*Standards for Soil Erosion and Sediment Control in New Jersey*".

Height (feet)	Minimum Top

	Width (feet)
0-15	10
15-25	12
20-25	14

(2) The design top elevation of all dams and embankments, after all settlement has taken place, should be at least one foot (1') above the maximum water surface elevation in the basin resulting from the greatest design storm.

(3) Maximum side slopes for all dams and embankments should be 3 horizontal and 1 vertical (3 to 1).

(4) All earth fill should be free from brush, roots and other organic material subject to decomposition.

(5) Cutoff trenches may be required to be excavated along the dam or embankment centerline to impervious subsoil or bedrock.

(6) An impervious central core should be constructed in the dam or embankment consisting of compacted clay material when required.

(7) Safety ledges should be constructed on the side slopes of all detention basins having a permanent pool of water. The ledges should be four feet (4') to six feet (6') in width and located approximately two and one half feet (2½') to three feet (3') below the permanent water surface.

(8) The fill material in all earth dams and embankments should be compacted to at least ninety five percent (95%) of the maximum density obtained from compaction tests performed by the appropriate method in ASTM D698.

(9) Any stormwater basin that impounds water through the use of an artificial dike, levee or other barrier, and raises the water level five feet (5') or more above the usual, mean lower height when measured from the downstream toe-of-dam to the emergency spillway crest, is classified as a dam and subject to the "*New Jersey Dam Safety Standards*", NJAC 7:20. All such dams must be designed, constructed, operated and maintained in compliance with the rules of NJAC 7:20. Warren County will not accept responsibility for inspecting any dam structures or for the review of subsequent inspection reports as required by NJAC 7:20.

f. Submission Requirements

The following list of items and project data should be included with the stormwater management plan submitted to Warren County for approval.

(1) Topographic map depicting the limits of the drainage area tributary to the proposed detention basin and any site area bypassing the detention basin. Map scale and contour interval should be of sufficient size to allow accurate determination of ridge lines.

(2) Topographic map of the proposed detention basin depicting both existing and proposed

contours as well as the principal and emergency spillways and all other related construction in and around the proposed detention basin. Map scale and contour interval should be of sufficient scale to accurately calculate stage-storage relationships.

(3) Plan, profile and cross-sections of the waterway downstream and upstream (where applicable) of the proposed detention basin. The profiles should be of sufficient length and scale to allow accurate determination of both downstream tailwaters and upstream backwaters caused by the basin.

(4) The dimensions of the nearest bridge or culvert upstream and downstream of the proposed basin. Dimensions should include the rise, span, length and difference in elevation between the crown or maximum low chord and the low point in the roadway above the structure. Span should be measured normal to the flow path and should not be a skew distance. The material nature of the structure (e.g. corrugated metal pipe, concrete walls with earthen bottom, etc.) should also be noted.

(5) Pertinent design computations presented in clear manner for the proposed basin, including hydrologic, hydraulic and structural designs. Computations should contain a narrative description of the methodology and a summary chart indicating total existing and proposed peak runoff values.

(6) Results of the subsurface soil investigation.

(7) The depth to the seasonal high groundwater table at the basin site.

(8) Structural detail drawings of all pertinent features of the project. This would include outlet structures, dams, embankments, etc.

(9) Property lines and owners of all affected properties.

(10) Dam stability calculations may be required where conditions affect the County.

(11) A soil erosion and sediment control plan prepared in accordance with NRSC Standards.

(12) Copies of the NRSC Detention Basin Summary forms.

6.04 INFILTRATION TECHNIQUES

a. Infiltration practices such as dry wells, infiltration basins, infiltration trenches, etc., may be used in order to comply with the stormwater management requirement if feasibility can be demonstrated. The following information is required to show feasibility:

(1) Location of all proposed dry wells.

(2) Soil tests indicating soil classes and minimum infiltration rates at the bottom of the infiltration structure.

(3) Topographic character of site including slope, cut and fill areas, and proximity of building foundations, water supply wells and septic fields.

(4) Pertinent design computations.

(5) Complete construction details.

b. Infiltration structures should be designed to empty within seventy two (72) hours from the beginning of a storm.

c. The bottom of the infiltration structure should be at least two feet (2') above the seasonally high water table and/or bedrock.

d. Infiltration structures must be located at least fifty feet (50') from any sewage disposal field, and fifty feet (50') away from any water supply well.

e. Infiltration structures should not be located in areas of slope that exceeds twenty percent (20%) or in areas of fill.

f. Infiltration structures should not be constructed until the drainage areas contributing to the structure have been adequately stabilized.

g. Excavations for infiltration structures must be lined with a geotextile filter fabric.

h. Once installed, infiltration structures are difficult to inspect and maintain. Consequently, their design should include sediment and grease traps, readily accessible structures, and vegetated filters to protect the integrity of the practice and ensure a long functional life.

i. Design calculations must be submitted to show infiltration facilities meet the zero increase criteria for a one hundred (100) year storm event and must contain one hundred percent (100%) of the drainage area runoff for a storm of one inch (1") rainfall in one (1) hour.

SECTION 7 - ROAD IMPROVEMENTS

7.01 GEOMETRIC DESIGN GUIDELINES

a. The geometric design of all County road improvements shall be in accordance with the AASHTO publication *"A Policy on Geometric Design of Rural Highways"* and any amended and supplementary publications thereto, or the "*NJDOT Design Manual Roadway"*, whichever is more stringent. Design exceptions to these standards shall be applied at the discretion of the County Engineer.

b. Improvements to the County road shall conform to the minimum desirable typical roadway sections shown in the Appendix for the minor arterial, major collector and minor collector roads.

c. Bicycle and pedestrian facilities shall follow the recommendations set forth in NJDOT *"Bicycle Compatible Roadways and Bikeways Design Guidelines"* and *"Pedestrian Compatible Planning and Design Guidelines"* both dated April, 1996.

7.02 RIGHT-OF-WAY AND EASEMENTS

a. Right-of-Way Requirements

The right-of-way requirements for existing and proposed County roads shall be sixty six feet (66'), except in areas where additional traffic lanes, turning lanes, bike lanes, pedestrian walkways, utilities, bridges, drainage facilities, or geographic conditions warrant a wider width. Right-of-way returns at intersections shall have a twenty five foot (25') radius unless otherwise directed by the County Engineer.

b. Dedication of Additional Right-of-Way

(1) Development that adjoins or includes existing County roads with rights-of-way that do not conform to widths as shown on the adopted County Master Plan (sixty six feet (66') minimum) shall dedicate additional right-of-way width along either one or both sides of said road. If the development is along one side only, one half (½) of the required extra width shall be dedicated, measured from the existing centerline of the right-of-way.

(2) Where, by reason of special or unusual conditions or to conform to the adopted Master Plan or Official Map, said total additional right-of-way is to be secured from just one side of an existing road, only one half (½) of the additional right-of-way may be required to be dedicated and the remaining area proposed for right-of-way shall be reserved for future acquisition and all building setbacks shall be measured from the limits of the reserved area.

(3) Additional right-of-way may be required at County bridge and culvert structures to allow for proper inspection, maintenance, repair and/or replacement.

(4) Development of properties that adjoin or include planned County roadways for the adopted Warren County Transportation Master Plan shall dedicate the needed right-of-way (sixty six feet (66') minimum) for these roadways.

(5) In cases where subdivisions fronting on County roads and include existing structures in a

condition to permit use and occupancy, the County Engineer is permitted to waive or adjust the right-of-way width requirement for the lot, or portion thereof, upon which such building or structure is located, provided:

(a) Such lot created, upon which said building or structure exists, would be a non-conforming lot pursuant to zoning regulations of the municipality in which the subdivision is located because of inadequate setback, or

(b) The structure has historic significance, and

(c) The right-of-way waiver does not impact future road improvements.

(6) The Planning Board may waive the requirement for additional right-of-way under the Master Plan or Official Map for the remaining parcel in a subdivision which does not create an adverse drainage condition and meets the following conditions:

(a) The subdivision does not involve more than three (3) lots.

(b) The remaining parcel contains sufficient land to be further subdivided under the Zoning Ordinance requirements of the municipality in which it is located.

c. Clear Sight Areas

(1) Sight easements shall be dedicated to the County of Warren in areas adjacent to a curve on a County road where the minimum sight line extends outside of the road right-of-way. Minimum sight lines are contained in the chart below and are measured from the center of traveled lane to the center of traveled lane.

Legal Speed Limit	Minimum Sight Lines
25	271
30	333
35	400
40	474
45	553
50	638

(2) Sight triangles shall be dedicated to the County of Warren at all roadway intersections and major driveways. Sight triangles shall measure thirty feet (30') x one hundred feet (100') outside and along the proposed right-of-way lines. Such sight triangles shall insure that an unobstructed view of the intersection shall be maintained. Sight triangles and the area within the right-of-way shall be graded so as not to be higher than the road pavement or top of curbing along both roadways. Sight triangles shall be cleared so that there will be no obstruction to vision between the heights of two feet (2') and ten feet (10'). Traffic control devices and other man made or natural objects may remain if it can be demonstrated that they do not adversely obstruct the view of the intersection.

(3) At new road intersections, the sight triangle shall be dedicated to the County as additional right-of-way in accordance with the typical intersection detail shown in the Appendix.

(4) In circumstances where unusual topography/geology, historic structures, etc., limit the applicant's ability to create the standard sight triangle, the applicant may seek a waiver of the requirement by demonstrating hardship to the Planning Board. The Board shall rule on the waiver based on the record and the recommendations of the County Engineer.

(5) The County shall have right of entry to remove any obstruction to vision within a sight easement area not conforming to these standards following due notice to the property owner.

d. Drainage and Utility Easements

Drainage and utility easements may be required where County drainage systems and utility systems extend outside the public right-of-way. The width and extent of these easements will be as required to install, inspect, maintain and replace each installation.

e. Right-of-Way Encroachment

No part of the County road right-of-way may be used for the conduct of private business. The County right-of-way is to be kept clear of buildings, advertising signs, sales or merchandise displays, vehicular parking areas, servicing of vehicles, service equipment and appurtenances thereto.

7.03 ACCESS, REVERSE FRONTAGE AND MARGINAL SERVICE ROADS

a. When a major subdivision abuts a County road, all lots shall be designed to front on an internal street or marginal service road with no access to the County road.

b. When a residential development involves land with frontage on a County road which is due to its size, shape or other peculiar or unusual circumstances makes the provision of a marginal service road or reverse frontage impractical or unnecessary, then in lieu thereof, the development shall provide common driveways wherever possible.

c. It is recommended that adjoining developments provide internal connections wherever possible to allow for good local circulation and minimize the number of intersections required on the County road.

d. Where a development abuts the rear of existing properties which front on a County road, a twenty two foot (22') wide alley should be considered to provide improved access to the existing properties. Many existing properties do not have adequate sight distance and/or available space for driveways and turnarounds to allow for front access. The travelway of the alley should be improved to a width of eighteen feet (18') or as directed by the municipality.

7.04 OFF-STREET PARKING AND LOADING AREAS

a. Off-Street Parking

(1) Number of Off-Street Parking Spaces

Each land development subject to County site plan approval shall provide on its lot the

number of off-street parking spaces required by any zoning, subdivision, site planning or other ordinances of the municipality in which the land development is to be located, unless a variance or waiver from the municipality is received.

(2) Design of Off-Street Parking Area

(a) Off-street parking areas shall be so designated to permit all vehicles to turn around on the site in order to prevent the necessity of any vehicle backing onto the County road from such site.

(b) No required off-street parking space including adjacent parking access lanes or maneuvering space shall be located within the existing or proposed right-of-way of the County road, including the sidewalk.

b. Off-Street Loading Spaces and Areas

Each land development subject to County site plan approval shall provide on its lot the number of off-street truck loading or unloading spaces required by a zoning, subdivision, site planning or other ordinance of the municipality in which the land development is to be located. However, in the absence of local off-street truck loading requirements applicable to the site, the following restrictions shall be applied:

(1) No part of any off-street truck loading or unloading space shall be located within the right-of-way of the County road, including the sidewalk area.

(2) No portion of the existing or proposed County right-of-way, including the sidewalk area shall be used to maneuver vehicles into or out of loading and unloading spaces.

c. Customer Service Areas

Any site plan that provides temporary stopping space or maneuvering space for vehicles of customers or patrons seeking service at a roadside business establishment such as a roadside grocery stand, filling station, drive-in bank, etc., shall be located so that the stopping or maneuvering space is outside of the existing or, where applicable, future right-of-way line of the County road.

d. Passenger Service Areas

Any site plan subject to County review and approval shall provide that passenger service areas and/or passenger shelters are located so that the terminal area or maneuvering space is located outside of the existing right-of-way line of the County road and must not hinder the flow of traffic. For site plans that provide two hundred (200) or more parking spaces, or for developments that generate one thousand (1,000) person trips per day, the Planning Board may request the applicant to provide such passenger service areas.

7.05 PAVEMENT AND SHOULDER CONSTRUCTION

a. Major subdivisions and site plans fronting on a County road will be required to make pavement and shoulder improvements to bring the road frontage into conformance with the County's minimum desirable typical road sections. All pavement widening sections shall have fifty feet (50') transition tapers on each end.

b. Horizontal clearances along the frontage of the County road should be in accordance with AASHTO standards.

c. All pavement and shoulder improvements will include provisions for adequate drainage facilities.

d. Where road widening improvements required by a reviewing authority cross over a County culvert or bridge, said structure shall be extended in accordance with the requirements of section 9, "Bridge and Culvert Improvements".

e. Where the proposed land development is located along a County road that is to be widened or where shoulder improvements are to be made as a regular part of the annual work program of the County of Warren, then the developer shall be required to pay to the County its proportionate share of the cost of such improvement along the frontage of his property.

f. Subgrade Preparation - Before placing any base material, the contractor will check the subgrade and do all necessary excavating, rolling and compaction to obtain a true, even and uniform surface. The contractor will fill and consolidate any traces of dented or depressed areas. All spongy or otherwise unsuitable material shall be replaced with clean earth, compacted firmly. All exceptionally hard spots will be loosened and recompacted. Every precaution shall be taken to obtain a subgrade of uniform bearing capacity. The roller for compacting all subgrade areas shall not weigh less than ten (10) tons. The subgrade shall be rolled and cross-rolled prior to laying of any materials.

g. Finished Pavement - The contractor will place the pavement in such a manner and procedure that the finished pavement will meet all County specifications. It is the contractor's responsibility that rolling procedures will be according to New Jersey State Specifications. It is the contractor's responsibility to maintain the existing drainage pattern of the road. At the completion of paving operations, all pavement shall match the existing pavement at intersections, driveways, etc. This cost shall be included in the unit cost of bituminous surface course mix.

h. All work will be performed in accordance with the "*New Jersey Department of Transportation Standard Specifications for Road and Bridge Construction*".

7.06 ROAD INTERSECTIONS

a. Typical Intersection Detail

All proposed roadway intersections with a County road shall, as a minimum, provide pavement widening and be designed in accordance with the typical intersection detail, shown in the Appendix. AASHTO standards will be followed as applicable. This work shall be constructed as an on-site improvement.

b. Locations of Intersections

All intersections with a County road shall, given the physical constraints of the site, be located to afford maximum safety to the traveling public.

c. Sight Distance

(1) All proposed roadway intersections must meet the minimum sight distances for a vehicle stopped at the stop bar and for vehicles approaching the intersection as shown on detail T3 of these standards (see appendix for detail T3). The required sight distance shall be measured using a height of three and one half feet (3½') for the driver's eye and for the approaching vehicle. Sight lines must be shown on plan view and sight line profiles must be submitted to demonstrate compliance. The line of sight shall be a minimum of six inches (6") above any paved area, twelve inches (12") above any lawn area, and twenty four inches (24") above all other vegetated areas along its entire length.

(2) If a roadway has no posted speed limit, the applicant shall contact the Engineer's Office for a determination of an appropriate design speed based on the statutory speed limit.

(3) New intersections are to be designed to maximize the sight distance along the County road. The values given in Detail T3 are minimums and should be exceeded where possible.

(4) The desirable sight distances given in Detail T3 are to be obtained when conditions permit.

(5) The sight lines must stay within the County right-of-way or a sight easement must be obtained from the adjoining property owner(s). The easement line shall be set a minimum of five feet (5') parallel to the sight line.

(6) In circumstances where an applicant proposes to create an access road at a location where prescribed sight distance does not exist, the applicant shall be required to clear and/or grade such areas, or reconstruct portions of the roadway, as necessary to obtain the sight distance.

(7) The applicant shall obtain control of said areas by easement dedicated to the County of Warren as is necessary to secure the sight distance in perpetuity.

d. Sight Triangles

Sight triangles will be provided at all intersections and major driveways in accordance with section 7.02.c. of these standards.

e. Angle of Intersection

Intersecting streets wherever possible shall be constructed so that the centerline of the intersecting street is perpendicular to the centerline of the County road (or to the tangent at the point of intersection where the County road is on a curve) for a distance that is equal to the proposed right-of-way of the County road as determined by the Warren County Transportation Master Plan. Where geometric conditions won't allow for a ninety degree (90°) design the intersecting road may be angled but in no case less than seventy five degrees (75°) as approved by the County Engineer.

f. Spacing

(1) All proposed intersections with a County road shall be aligned or offset with respect to all

other existing and proposed intersections according to the following:

Where there is an existing or proposed intersection on the County road opposite the frontage of the development and where site conditions allow, the road servicing the development shall be located directly across from said existing or proposed road forming a cross intersection.

If the proposed road cannot be aligned directly opposite the roadway across the County road, than it shall be offset a minimum of 350 feet between centerline intersections.

The location of a new road intersection shall also be a minimum of 500 feet from any existing or proposed intersection on the same side of the County road.

(2) The distances shall be measured along the County road centerline between the intersecting street centerlines.

(3) The County Planning Board may, at its discretion, increase or decrease the above required minimum distances or may require reconstruction of the County road by the developer as may be necessary to permit the construction of the proposed intersection due to one or more of the following considerations:

(a) sight distance;
(b) hazardous traffic conditions;
(c) vertical and/or horizontal alignment of the road or roads;
(d) neighboring developments, e.g. possibility of tying into adjoining developments; and
(e) site frontage.

g. Centerline Profile

The minimum practical grades shall be maintained on the approaches to streets connecting with County roads which shall not exceed four percent (4%) within fifty feet (50') from the proposed gutter line of the County road.

h. Curb Radii

The radii of curbs at intersections where either road or both roads are in the County road system shall meet the following minimum standards based on the classification of the intersecting roads on the adopted Master Plan and/or Official Map. The lower classification of road forming the intersection shall determine the standard.

Arterials	-	Fifty Feet (50')
Collectors	-	Thirty Five Feet (35')
Local	-	Twenty Five Feet (25')

i. Left Turn Lanes, Jughandles and Overpasses

The construction of and/or the conveyance of land to the County for left turn lanes, jughandles and overpasses may be required by the County Planning Board, with the approval of the County Engineer, when warranted, for a proposed development which will generate a significant amount of traffic or create an undesirable traffic safety condition.

j. Traffic Control Devices

(1) Traffic control devices shall be provided by the developer and conform to the "*Manual on Uniform Traffic Control Devices for Streets and Highways"*, the New Jersey Department of Transportation specifications and the specifications of the County Engineer. This shall include developer responsibility for supply and installation of advance intersection warning signs (with street identification plates), stop sign, stop line and other pavement markings as required by design. All devices are subject to review by the County Engineer.

(2) Any plan to change the existing No Passing Zones on County roads requires New Jersey Department of Transportation approval. Once the striping plan is approved by the County Planning Board, the applicant shall submit the striping plan to the County Engineer for review and approval by the New Jersey Department of Transportation. A Mylar of the final approved plan shall be provided to the County Engineer.

k. Drainage

A detailed drainage plan will be provided at all intersections with sufficient grades to ensure that all flows are accommodated in the gutters and directed to catch basins.

7.07 CURBING AND SIDEWALKS

a. Curbing - Concrete curbing shall be installed along the frontage of the entire property or along the entire improved area if deemed necessary for traffic control or where it is required by the County Engineer to control an existing or potential adverse drainage or erosion condition. All curb ends shall be transitioned from full height to two inches (2") over a distance of ten feet (10').

b. Depressed Curbing - Depressed curbing shall be installed at all driveways and sidewalk ramps. The depressed curbing shall have a one tenth of a foot (0.1') reveal above the gutter. At sidewalk ramps, the one tenth of a foot (0.1') shall be maintained and a bituminous ramp in the gutter will be provided. All pedestrian ramps will comply with current County and Americans with Disabilities Act requirements. The horizontal transition from full height to depressed curb height shall be at a slope not to exceed one inch (1") in twelve inches (12") (8.33%).

c. Sidewalks

(1) General

Where there is no local ordinance requiring the installation of sidewalks, the County Planning Board may, in order to protect pedestrian traffic while facilitating vehicular movement, require that they be provided within the County right-of-way if requested by the municipality.

In those instances where municipalities require sidewalks to be provided within the County right-of-way, the County Planning Board, in conjunction with the County Engineer, shall have final discretion on its installation.

Prior to approving municipally required or requested sidewalks within the County right-

of-way, the County shall be furnished with evidence showing that the municipal governing body has adopted an ordinance which affixes the maintenance responsibility of said sidewalks either on the municipality or the abutting landowners. The municipality will also have to execute a sidewalk agreement with the County.

(2) Sidewalk location - Sidewalks should be located as far from the edge of pavement as possible, preferably one foot (1') inside the right-of-way line. A grass area with a desirable width of six feet (6') or a minimum width of four feet (4') shall be maintained between the sidewalk and the existing or proposed curbing.

(3) Sidewalk widths shall comply with the municipal ordinance and should have a gradient of no more than five percent (5%). Sidewalks and aprons shall be constructed with four inches (4") thick class B concrete on a four inches (4") thick compacted aggregate base. All thicknesses shall be uniform. All concrete areas will have six inches (6") x six inches (6") 10/10 woven wire mat reinforcement. A broom finish will be applied.

(4) Sidewalk cross slope - In areas, the sidewalk shall slope one-quarter inch (1/4") per foot rising from the top of standard curb. In fill areas, the sidewalk shall slope one-quarter inch (1/4") per foot falling from the top of standard curb.

(5) Ramps - Curb cut ramps with a maximum slope of twelve (12) to one (1) (8.33%) shall be provided at all intersections and pedestrian crossings. All ramps shall comply with the Americans with Disabilities Act current standards.

d. Driveway Slabs - Driveway slabs shall be class B concrete, six inches (6") thick with a four inches (4") compacted aggregate base and six inches (6") x six inches (6") 10/10 woven wire mat reinforcement. A broom finish will be applied.

e. Construction - All concrete shall be properly cured and protected in accordance with the "*New Jersey Department of Transportation Standard Specifications for Road and Bridge Construction*". Fall construction will require additional protection from road salts and winter weather.

7.08 DRAINAGE FACILITIES

a. Adequate drainage facilities shall be required relating to County roads where a land development would create an adverse drainage condition as a result of the construction of the development.

b. When a drainage system or any part thereof is proposed in connection with a land development which relates to a County road and structures, and additional capacity is necessary to accommodate emergency runoff conditions or anticipated stormwater runoff from the future development of other areas tributary to the drainage system, the procedure shall be as follows:

(1) The existing stormwater runoff shall be calculated by the applicant's Engineer and submitted with the proposed drainage system calculations.

(2) The capacity, design, and estimated cost of the drainage system to accommodate stormwater runoff from the development shall be determined by the applicant's Engineer and submitted for approval by the County Engineer.

(3) The capacity of the enlarged system to provide for the land development areas outside of the development tributary to the drainage system shall be established by the County Engineer. The plans of the system shall be prepared by the developer's Engineer and the estimated costs of the enlarged system shall be submitted to the County Engineer for review and approval.

(4) The developer shall be responsible for the cost of the system to accommodate the stormwater runoff from the development and the County will be responsible for the additional costs associated with the enlarged system. The applicant shall make a payment to the County based on the proportion that the acreage in the land development is to the total acreage served by the system times the estimated construction cost of the system.

(5) When land developments occur which are tributary to a drainage system which has been enlarged by the County, the developer shall make a payment to the County based on the proportion of his land development.

c. Design of Storm Drainage Systems

(1) All proposed storm drainage systems within County right-of-way or intersecting into County storm drains shall be designed to carry the flow for a twenty five (25) year storm event.

(2) The hydraulic characteristics of storm drain pipelines shall be calculated using the rational design method.

(3) Pipelines shall be designed to carry the maximum runoff when flowing full.

(4) A minimum design velocity of two and one half feet (2½) per second shall be used for flowing full condition. A maximum design velocity of fifteen feet (15') per second shall be used to avoid pipe scour.

(5) Minimum pipe diameter: fifteen inches (15").

(6) A minimum drop of one tenth of a foot (0.1') between pipe inverts shall be provided in each inlet or manhole.

(7) Pipe used shall be circular reinforced concrete pipe, Class III, Wall B, unless otherwise directed or approved by the County Engineer and laid with not less than two feet (2') depth of cover over the top of pipe wherever possible.

(8) Upon approval of the County Engineer, pipes forty eight inches (48") or more in diameter may be laid on a radius, provided the radius is no less than two hundred (200) pipe diameters.

(9) Transitions in pipe size, changes in slope, changes in horizontal direction, and/or junctions shall be made in manholes, inlets or structures designed for the above purposes.

(10) Ends of pipelines starting or ending in ditches or streams shall be encased in head walls conforming to the construction details set forth herein. Precast flared end section may be

used where site conditions allow.

d. Design of Inlets and Manholes

(1) Inlet and manhole spacing shall not exceed four hundred feet (400'), or a maximum design inlet flow of six (6) cubic feet per second (twenty five (25) year design storm).

(2) Inlet casting curb head height shall be the same as the curb height specified. Castings shall conform to NJDOT Standards.

(3) Inverts shall be constructed to cause the least possible resistance to flow. The shape of the inverts shall conform uniformly to inlet and outlet pipes. A smooth and uniform finish is required.

(4) Except where site conditions place the low point of a sag curve on the curb return, inlets shall be located at the point of curvature or the point of tangency of the curb radius.

(5) Inlets shall be located to intercept water before crossing an intersection or crosswalk.

(6) All inlet grates shall be bicycle safe grates.

(7) Manholes and inlets shall be constructed in accordance with the current County and "*New Jersey Department of Transportation Standard Specifications for Road and Bridge Construction*". Catch basins may be precast, cast-in-place, or concrete block construction. If concrete block is used, all joints shall be mortared and both the inside and outside of the box shall be completely plastered prior to backfilling.

e. Construction procedures

(1) Excavation

(a) In paved areas, the existing pavement will be cut entirely through and removed in a manner which does not disturb the adjacent pavement.

(b) No more than one hundred foot (100') of trench will be opened in advance of pipe laying, unless permitted by the Engineer. All open trenches shall be backfilled by the end of the work day.

(c) All trenching operations shall be in accordance with "*New Jersey Department of Transportation Standard Specifications for Road and Bridge Construction*" and the "O*ccupational Safety and Health Administration (OSHA) Regulations 29 CFR 1926.1.*" Safety requirements and precautions for excavations will be implemented prior to that work being commenced.

(2) Bedding, Placing and Backfilling

(a) Where unsuitable or unstable material is found at the bottom of excavations, the contractor will remove the unacceptable material as directed by the Engineer and replace with suitable bedding material for the installation.

(b) Backfill material will be earth materials only, free from perceptible amounts of wood, debris, or topsoil and will not contain marl or other elements which tend to keep it in a plastic state. The material will be free of frost at the time of placement. Rocks and stones larger than two inches (2") in any dimension will be excluded within two feet (2') of the pipe. Material will be moistened, if necessary, for optimum results of compaction. No puddling will be allowed without permission in writing from the Engineer.

(c) The backfill shall be placed in layers not more than six inches (6") thick, and each layer shall be compacted with flat-face mechanical tampers to ninety five percent (95%) minimum dry density.

(d) Backfilling for storm drains in pavement areas and shoulders within five feet (5') of the edge of any proposed pavement will be with flowable fill or dense graded aggregate base placed in six inch (6") lifts as directed by the County Engineer. If the pipe area is not to be paved, the compacted backfill material will be brought up to the finished pavement grade.

(e) The pipes will be thoroughly cleaned before they are laid and will be kept clean until the acceptance of the completed work.

(f) Whenever a pipe requires cutting to fit into the line or to bring it to the required locations, the work will be done in a satisfactory manner so as to leave a smooth end.

(g) Ruptures - Work broken or ruptured by improperly placed backfill will be removed and replaced.

(h) All castings shall be set flush with the finished pavement surface on all sides unless otherwise directed. Along roadway pavements, the castings will be set parallel to the centerline profile and on the same slope as the crown of the road or shoulder.

(i) Existing inlet and/or manhole castings that need to be raised one inch (1") to two inches (2") may be raised using cast iron extension frames or rings, if approved by the County. Those inlets or manholes which need to be raised greater than two inches (2") will be raised using concrete masonry brick and mortar. The reconstructed area shall be plastered with mortar on both the inside and outside to prevent infiltration. Existing inlet and manhole castings not to be used on the project shall be delivered by the contractor to the nearest County maintenance garage, unless otherwise directed.

7.09 SIGNS

a. General

To facilitate the safe and efficient movement of traffic into and out of a site, the County Engineer may, as a condition of the approval, require the installation of specified directional, regulatory or advisory signs or pavement markings at designated locations. Such signs shall be of a size, color and design as specified in the "*Manual on Uniform Traffic Control Devices for Streets and Highways*", as amended and supplemented by the New Jersey Department of

Transportation and by the County Engineer. All signs shall use 3M Diamond Grade Cubed (DG^3) sheeting or approved equal, and shall be mounted on a U-Channel or approved equal post with an FHWA approved breakaway base system.

b. Directory Signs

Directory signs for publicly owned destinations related to community service and recreation, or for County cultural and tourism program designations, may be installed on County roadways if their installation is found to benefit public safety. Directory signs for other destinations may be considered if a use has peak period traffic of five hundred (500) vehicles per day or more and if the County is compensated for material and installation costs.

c. Advertising Signs

No advertising sign, device, or marking may be designed to be erected on or overhang a County right-of-way.

7.10 TRAFFIC STRIPES AND TRAFFIC MARKINGS

a. General

(1) All permanent longitudinal center, edge and lane lines shall be long life epoxy resin traffic stripes, twenty (20) mils thick.

(2) All permanent diagonal gore lines, crosswalks, stop lines, words, arrows and other pavement symbols shall be long life thermoplastic traffic markings, one hundred twenty (120) mils thick.

(3) Placement of traffic stripes shall be made within five (5) days after paving. If final striping is delayed beyond this time period, the County may require that temporary striping or temporary pavement markers be placed to delineate center and lane lines on newly paved sections of roadways that need to be opened to traffic. Such temporary markings or delineators shall be at the contractor's expense.

(4) Traffic paint (latex or alkyd) shall be used when traffic stripes or traffic markings are required on intermediate pavement layers that need to be opened to traffic due to stage construction. Where lane shifts are necessary on the intermediate layers, or on existing pavements not being repaved, removable pavement marking tape or temporary pavement markers shall be specified.

(5) The space between centerline traffic stripes is to be six inches (6"). All traffic striping must be marked out by the contractor and inspected by the County Engineer's Office prior to installation.

(6) All pavement markings shall be protected until track-free by placing guarding or warning devices as necessary. In the event a vehicle should cross the marking causing tracking, such marking shall be reapplied and any deposition of the marking made by the moving vehicle shall be removed at no expense to the County.

b. Glass Beads

Immediately after, or in conjunction with the striping application, glass beads shall be applied to the wet compound. The beads shall be applied in a uniform pattern at a rate in conformance with current County standards and practices. The beads shall be compatible with striping material and shall meet the bead gradation for epoxy resin beads given in the "*NJDOT Standard Specifications for Road and Bridge Construction*".

c. Determination of Acceptability

The developer/contractor shall furnish a retroreflectometer for the Engineer's use in determining the retroreflectance values of the various traffic stripes or traffic markings. This equipment is for the use of the Engineer during the project and will be returned to the developer/contractor after acceptance of the pavement markings. Acceptable reflectance values shall be as specified in the "*NJDOT Standard Specifications for Road and Bridge Construction*".

The developer/contractor shall replace long life traffic stripes or traffic markings determined to be in nonconformance with the specifications, not placed at the locations or in the dimensions specified, or that have overlapped a different type of long life material.

d. Raised Pavement Markers

(1) General

Pavement reflectors and castings shall be Stimsonite Model 96N and Stimsonite Reflector Model 944P, as manufactured by the Amerace Corporation, Stimsonite Products Division, 7542 North Natchez Avenue, Niles, Illinois 60648, or approved equal.

(2) Construction Requirements

(a) The developer/contractor shall lay out the locations of all pavement reflectors and casting before permanent installation to assure their proper placement.

(b) The developer/contractor shall install the raised pavement markers in conformance with the manufacturer's specifications or as directed by the County Engineer.

(c) Raised pavement markers are to be installed within two (2) weeks of completion of paving on each road.

7.11 SOIL EROSION AND SEDIMENTATION CONTROL

a. Appropriate soil erosion and sediment control measures shall be required, as mandated by Chapter 251, P.L. 1975, as heretofore amended, and enforceable by the Soil Conservation District or designated local approval authority. All work shall be in accordance with the "*Standards for Soil Erosion and Sediment Control in New Jersey*".

b. Proof of submission and certification of a proper Soil Erosion and Sediment Control Plan in accordance with New Jersey Soil Erosion and Sediment Control Act, Chapter 251, P.L. 1975, shall be received prior to final plan approval. No construction shall be commenced until a

permit is obtained.

c. Construction Procedures

(1) The Warren County Soil Conservation District shall be represented at the project preconstruction meeting. If the Municipal or County Engineer does not schedule a preconstruction meeting, it will be the responsibility of the owner applicant to schedule one prior to any land disturbance.

(2) Failure of the aforementioned plan shall not relieve the applicant of any of its responsibilities relevant to the appropriate statutes. Additional erosion and sediment control measures may be required as deemed necessary by the District in the event of any unforeseen problems incurred during construction.

(3) Any changes of approved plans shall require an additional submittal to the District including appropriate re-review fees.

(4) Two (2) weeks written notice by the contractor must be given to the Warren County Soil Conservation District prior to any land disturbance.

(5) NJSA 4-24-39 et. seq. requires that no certificates of occupancy be issued by the municipality before the provision of the certified plan for soil erosion and sediment control have been complied with for permanent measures. Two (2) weeks written notice is usually required by the District to schedule inspection of compliance release.

(6) Final stabilization of all land disturbance associated with underground utilities irrespective of phasing, is the ultimate responsibility of the owner.

(7) All sediment tracked onto public right-of-ways shall be swept at the end of each working day.

(8) Dust shall be controlled with water, calcium chloride or other methods approved by the Soil Conservation District.

(9) The tracking pad shall be kept clean and repaired as necessary.

7.12 SHADE TREES AND LANDSCAPING

a. Shade Trees

(1) Proposed development plans shall show and identify existing trees over eight inches (8") in diameter within the County right-of-way.

(2) Warren County Shade Tree Commission approval must be obtained for the removal, pruning, trimming and/or repair to any tree eight inches (8") in diameter or larger within the County right-of-way.

(3) The contractor shall take all necessary precautions to avoid damage to existing trees.

(4) Trees over eight inches (8") in diameter that must be removed due to construction shall

each be replaced with two (2) four inch (4") caliper trees.

(5) Along County roads without existing trees, new shade trees shall be planted at seventy-five foot (75') intervals. The trees are to be placed along the County right-of-way line and shall be two and one half inch (22") caliper DBH for shade trees and two inch (2") caliper DBH for ornamental trees. The diameter breast height (DBH) shall be measured four and one half feet (42') above the top of the tree ball. In areas with overhead utility lines, the type and location of all trees will be designed to avoid future conflict with these lines. If the required shade trees cannot be planted along the development frontage, they will be planted by the developer at appropriate locations along the same County road, as directed by the County Engineer and County Shade Tree Commission.

(6) Plant Materials: Plants shall have a habit of growth that is normal for the species and shall be sound, healthy, vigorous and free from insect pests, plant diseases and injuries. All plants shall be equal to or exceed the measurements specified in the plant list. They shall be measured before pruning, with branches in normal position. Any necessary pruning shall be done at the time of planting. Requirements for the measurement, branching, grading, quality, balling and burlapping of plants in the plant list shall follow current guidelines listed in the *"American Standard for Nursery Stock"*, American Association of Nurserymen.

(7) Planting Trees:

(a) Excavate planting pits as required for proper placement of the trees.

(b) Set balled and burlapped stock on layer of compacted planting soil mixture, backfill carefully and water.

(c) Dish top of backfill to allow for mulching. Provide additional backfill berm around edge of excavations to form shallow saucer to collect water.

(d) Prune, thin out and shape trees as directed by the professional.

(e) Guy and stake trees as shown on drawings immediately after planting.

(f) The trunks of all trees designated to be wrapped shall be wrapped spirally from the ground line to the height of the first branches.

(g) Trees shall be mulched with a three inch (3") layer of wood chips within two (2) days after planting. This mulch shall entirely cover the area of the saucer around each plant.

b. Seeding, Fertilizing and Mulching

This work shall consist of furnishing and placing of pulverized limestone, fertilizer and seed mixtures. Grass seed will be NJDOT Type A-3.

The contractor shall seed, fertilize and mulch all areas disturbed by their construction activities in accordance with the "*New Jersey Department of Transportation Standard Specifications for*

Road and Bridge Construction".

7.13 GUIDE RAIL

a. Guide rail protection may be required along County road frontage of land developments. This is to be determined by the County Engineer at the time of review.

b. Existing guide rail may be removed, subject to the County Engineer's approval, after the developer has completed installation of sufficient fill behind the existing guide rail to eliminate its need. Existing guide rail that is removed shall be delivered by the developer to the nearest County maintenance garage, unless otherwise directed.

c. All guide rail shall be in accordance with the County standards and the "*New Jersey Department of Transportation Standard Specifications for Road and Bridge Construction"*.

d. Non-vegetative bituminous concrete surface shall be constructed under new or existing guide rail. The bituminous material shall be either I-5 or I-4 mix and be constructed at a width of three feet (3') x four inches (4") minimum depth. In areas of new construction, this area is to be boxed out and material may be placed prior to guide rail installation. Areas damaged by placing of posts must be repaired. In areas of existing guide rail, the vegetation and existing soils shall be removed to a minimum depth of four inches (4") and compacted prior to placement of bituminous material. Suitable excavated material can be leveled and seeded in existing road embankment.

7.14 MAINTENANCE AND PROTECTION OF TRAFFIC

a. General

(1) The County Planning Board may specify that the developer prepare a traffic control plan to insure the safe and expeditious movement of traffic through work zones. Any work within the County right-of-way shall be performed in conformance with the "*Manual on Uniform Traffic Control Devices for Streets and Highways"*.

(2) All traffic control signs, devices, installations and procedures shall be as in the most current edition of the "*Manual on Uniform Traffic Control Devices for Streets and Highways"*.

(3) All traffic control signs and devices shall be kept in good and clean condition throughout the project. Signs or devices that show noticeable color fading, illegible lettering or significant residue or abrasions shall not be used.

(4) Before beginning work on any phase of the project, the developer/contractor shall furnish and install all specified warning signs, barricades, lights, flares and other items as directed by the Engineer, to protect the public during that phase of the work.

b. Flashing Warning Lights: If battery operated flashing warning lights are used, they shall conform to the specifications of the N. J. Department of Transportation and the County. These specifications require in part that the flashing lights be weatherproof and reasonably tamper-proof and theft-proof; be equipped with a seven inch (7") minimum diameter amber plastic lens; shall operate with a flash rate between fifty five (55) and seventy five (75) flashes per minute

with a flash duration of not less than eighteen percent (18%) of each flash cycle; and shall be inspected and cleaned daily so as to maintain the lights in proper working condition.

c. Flagmen: Where both directions of traffic are to use a single travel lane, the developer/contractor will at all times furnish at least two (2) traffic control flagmen with the necessary stop/slow paddles and safety clothing. These flagmen will be on duty at all times and it will be their sole duty to regulate and control traffic. Advanced signing prior to flagman locations, as per the "*Manual on Uniform Traffic Control Devices for Streets and Highways*" will be required. No work shall be done until qualified flagmen are on duty.

   Where companion flaggers are far apart or out of sight of each other, each shall be equipped with a portable two-way radio to maintain communications.

   Flaggers and other workers exposed to traffic shall wear a bright orange vest or other highly visible clothing. Flaggers shall be positioned in a highly visible location on the side of the roadway. Approaching traffic must be able to see the flagger in time to react and come to a complete stop at the flagger location. Flaggers shall use the proper hand signals and procedures as stated in the "*Manual on Uniform Traffic Control Devices for Streets and Highways*".

   Flaggers shall use stop/slow paddles to direct traffic in lieu of flags.

d. The developer/contractor shall keep all openings, all excavated materials, and all other machinery, tools or other materials properly guarded and shall place and maintain barricades, temporary fencing, guards or other appropriate warning devices at all times during the progress of the work. Adequate flashing warning lights shall be operated at the opening site to warn the public from one (1) hour before sunset until one (1) hour after sunrise. The contractor shall at all times comply with all State safety regulations.

e. The contractor shall, at all times, make provision for local residents to have access to their properties and shall maintain the roadway and adjacent areas free from needless obstruction.

SECTION 8 - DRIVEWAY IMPROVEMENTS

8.01 GENERAL

Driveways which intersect the right-of-way line of any County road within the County of Warren will not be constructed or modified unless a highway access and construction permit is first obtained from the Warren County Engineer.

8.02 NUMBER OF DRIVEWAYS

The number of driveways allowed from a site directly to a County road shall be as follows:

Length of Site Frontage	**Number of Driveways**
150 feet or less	1
More than 150 to 800 feet	2
Over 800 feet	To be specified by the County Engineer

8.03 DRIVEWAY LOCATIONS AND SIGHT DISTANCE REQUIREMENTS

a. Driveways and development entrances shall be so designed as to maximize the sight distance along the County road. The County Engineer may require the applicant to submit sight line profiles and cross-sections which demonstrate that the applicant's plans provide adequate sight distance along the County road.

b. Sight Distance Requirements

(1) Any driveway to a County road or driveway lane shall be so designed in profile and grade and shall be so located to meet the minimum sight distances as shown on detail T3 of these standards (see appendix for detail T3). The required sight distance shall be measured using a height of three and one half feet (3½) for the driver's eye and for the approaching vehicle. The measurement from the driveway shall be from a point twenty eight feet (28') from the centerline of the County road or 8 feet from the edge of pavement or stop bar, whichever yields the greatest offset from the centerline of the road. The line of sight shall be a minimum of six inches (6") above any paved area, twelve inches (12") above any lawn area, and twenty four inches (24") above all other vegetated areas along

its entire length.

(2) The sight line must stay within the County right-of-way or a sight easement must be obtained from the adjoining property owner(s). The easement line shall be set a minimum of five feet (5') parallel to the sight line.

(3) Obstructions from the line of sight to the edge of pavement such as trees, brush, embankment, vegetation, etc., will have to be removed by the permittee to assure proper visibility. The line of sight shall be a minimum of six inches (6") above any paved area, twelve inches (12") above lawn areas, and twenty four inches (24") above all other vegetated areas. Sight line obstructions must be cleared prior to other construction on the site.

c. Driveways shall provide for a turn around area outside of the County right-of-way.

d. Where a site occupies a corner of two (2) intersecting roads, no driveway entrance or exit shall be located within one hundred twenty five feet (125') of the centerline of the intersecting road, unless otherwise approved by the County Engineer. Additional separation distance may be required if warranted by site conditions. The driveway shall access to the road with the lesser road classification, unless sight distance or other hazardous conditions dictate otherwise.

If it is anticipated that the intersection may be signalized in the future, the driveways shall be located far enough from the intersection so as to not interfere with any signal detectors installed or turning lanes.
In order to minimize the conflicts of driveways entering a County road, the County Planning Board may require the design of common accesses or marginal service roads in an effort to minimize the number of traffic movements to and from the County road.

e. No driveway shall be located on the following portions of a County road:

(1) On a ramp of an interchange.

(2) Not within fifty feet (50') of the beginning of any ramp or other portion of an interchange.

f. Where two (2) or more driveways connect a single site to any one County road, a minimum clear distance of fifty feet (50') measured along the right-of-way line shall separate the closest edges of any two (2) such driveways.

g. A minimum of ten feet (10') shall be provided from the end of the return radius or flare and the extension of the property line to the edge of the pavement.

8.04 DRIVEWAY DIMENSIONS

a. The dimensions of driveways shall be designed to adequately accommodate the volume and character of vehicles anticipated to be using the driveway.

b. Single family residential driveways will be ten feet (10') to twenty feet (20') in width with five feet (5') to ten feet (10') radii or a flared pavement at the roadway.

c. Common driveways serving two (2) single family residential lots shall be twenty feet (20') to

twenty four feet (24') width with minimum ten feet (10’) radius returns.

d. All other driveways shall be designed with twelve feet (12') wide lanes and fifteen feet (15’) to twenty five feet (25') pavement radii depending on the use. When the pavement is curbed, an additional two feet (2') in width will be added to the curbed side. Driveways serving large volumes of daily traffic or traffic over twenty five percent (25%) of which is truck traffic shall add sufficient shoulder width to the pavement to safely accommodate all movements. The required width shall be provided for a minimum of fifty feet (50') from the edge of the County road pavement.

8.05 DRIVEWAY ANGLE AND PROFILE

a. Driveway Angle

(1) Driveways shall intersect the County road an angle to as near ninety degrees (90°) as site conditions will permit and in no case shall be less than seventy five degrees (75°).

b. Driveway Profile

(1) The slope of the driveway from the edge of pavement to the gutter line shall normally be two percent (2%) to four percent (4%) or as directed by the County Engineer.

(2) The first twenty five feet (25') from the proposed gutter line of the County road shall be no greater than six percent (6%) positive or negative.

(3) Any vertical curve on a driveway shall be flat enough to prevent the dragging of any vehicle undercarriage.

(4) Should a sidewalk be so close to the curb at a depressed curb driveway as to cause the ramp to be too steep and be likely to cause undercarriage drag, the sidewalk shall be appropriately lowered to provide a suitable ramp gradient.

c. Proposed Gutter Line

The proposed gutter line shall be twenty two foot (22') minimum from the centerline of the road and shall be designed to provide uninterrupted flow of storm water, unless directed otherwise by the County Engineer’s Office.

8.06 TURNING LANES AT DRIVEWAYS

a. Any major or minor driveway to a County road shall, as a minimum, provide pavement widening in accordance with the typical details included in the Appendix of these standards. This work shall be constructed as an on-site improvement.

b. Left Turn Lanes

When warranted, a left turn lane may be required. All turn lanes shall be constructed in accordance with AASHTO guidelines and the recommendation of the County Engineer.

8.07 DRAINAGE AND EROSION CONTROL

a. Drainage Discharge

Driveways accessing County roads shall be constructed and maintained in such a manner as to prevent the direct discharge of storm water from the driveway onto the County road pavement. Driveways in excess of one hundred feet (100') in length or ten percent (10%) in grade directing runoff to the County road should be designed with runoff diversions that direct driveway runoff across the property to avoid high peak discharge at the County gutter than can result in erosion and flooding along the roadway. The County may require a driveway storm drainage collection system to tie into adjacent County storm drainage.

b. Drainage Interference

All driveways constructed or altered within the County public road right-of-way shall be constructed in such a manner as not to interfere with the drainage along the existing pavement or traveled way. Under no circumstances shall the driveway be allowed to extend beyond the edge of the existing ditch or gutter line and create a hump or uneven driving surface on the pavement or traveled way or shoulder.

c. Gutters

The construction of a properly sized dish type gutter will be permitted provided that existing water flow will not be blocked, altered or changed in any manner.

d. Culvert Pipes

In cases where drainage ditches exist along County roads where a driveway is to be constructed, a reinforced concrete pipe must be installed under driveway. The size of this pipe is to be determined by the applicant using the Rational Method and based on a twenty five (25) year storm. In no case is a pipe of less than fifteen inches (15") in diameter to be installed. If more than one driveway is to be constructed, a continuous storm drain pipe shall be installed between the driveways or connected to an intervening storm drain system. If the proposed drainage pipe connects with an existing storm drainage system, a catch basin shall be constructed. Pipes are to be placed at the toe of a 2:1 slope, beginning at a point twenty two foot (22') minimum from the centerline of the County road. In most cases the center of the pipe will be no less than twenty six feet (26') to twenty eight feet (28') from the centerline of the County road.

e. Erosion Control

All driveways shall be constructed and maintained at all times in such a manner as to prevent erosion of the soil from them and land adjoining them. Water and silt shall be prevented from running onto the public roadways, filling up road gutters, catch basins, inlets or drainpipes. All construction and alteration work must be done in accordance with the *"Standards for Soil Erosion and Sediment Control in New Jersey"*.

8.08 CONSTRUCTION

a. General

No driveway construction will be started without first obtaining a Warren County Highway Access and Construction Permit.

b. Construction Material

Any new or altered driveway, accessing a County road shall be paved for a minimum distance of twenty five feet (25') from the existing County road edge of pavement. Pavement construction shall be as follows:

(1) Residential driveways

(a) 6" of dense graded aggregate (DGA) base course, thoroughly rolled and compacted.

(b) 2" of bituminous concrete surface course, Mix I-5, thoroughly rolled and compacted.

(2) Access roads, major driveways, and minor driveways

(a) 6" of dense graded aggregate (DGA) base course, thoroughly rolled and compacted.

(b) 4" bituminous concrete stabilized base course, Mix I-2, thoroughly rolled and compacted.

(c) 2" of bituminous concrete surface course, Mix I-5, thoroughly rolled and compacted.

(3) All material shall comply with "*New Jersey Department of Transportation Standard Specifications for Road and Bridge Construction*".

c. Where curbs exist, a full section of curb shall be entirely removed and depressed curb constructed in accordance with the "*New Jersey Department of Transportation Standard Specifications for Road and Bridge Construction*". Curb radii of existing curbs shall not be broken or depressed.

d. Where concrete sidewalks exist or are proposed to be constructed as part of a project, a reinforced concrete ramp not less than six inches (6") in thickness shall be built connecting the inner edge of the depressed curb with the outer edge of the sidewalk. Outer edge of sidewalk must carry the same grade as existing sidewalk and not be depressed.

e. All vegetation, embankments and obstructions which obstruct the sight distance shall be removed if adjoining properties are effected by the clearing of site line the permittee is responsible for coordinating this work with adjoining property owner.

SECTION 9 - BRIDGE AND CULVERT IMPROVEMENTS

9.01 GENERAL

a. New Bridges and Culverts

The County may assume ownership and future maintenance responsibilities for a new culvert or bridge on a running stream for a new public road within a development under the following conditions:

(1) The new structure has a cross sectional area equal to or larger than a forty eight inch (48") pipe.

(2) The structure has been designed in accordance with all County standards and requirements as approved by the County Engineer.

(3) Complete plans and specifications have been reviewed and approved by the County Engineer.

(4) All necessary State and local permits are obtained. The County must approve the plans prior to permit submittals and must be advised of all NJDEP preapplication and application meetings.

(5) The structure is built in conformance with the approved plans and inspected and accepted by the County Engineer. A “Highway Access and Construction Permit” is required for construction.

(6) The new road is accepted by the Municipality and dedicated as a public road. Ownership of the bridge or culvert will be transferred to the Municipality with the road. The Municipality will transfer ownership of the bridge or culvert to the County.

b. Existing County Bridges and Culverts

(1) Where County drainage structures exist entirely within the developer's frontage, and has adequate waterway area, the developer shall widen the structure to the toe of proposed slopes needed for future road widths or alignment, as designated by the County Engineer. Plans for proposed work shall have the approval of the New Jersey Department of Environmental Protection and the County Engineer.

(2) Prior to commencement of construction, the applicant shall be required to obtain a permit from the Warren County Engineer.

(3) In cases where a County drainage structure exists within the developer's frontage and the structure requires replacement for hydraulic or structural reasons, or is of such construction that widening of the existing structure is impractical in the opinion of the County Engineer, the developer shall make a cash payment sufficient to cover the cost of extending the structure to accommodate the proposed roadway width. This cost shall be determined by the County Engineer. The cost will include, but not be limited to, engineering design, surveying, permitting, and construction management.

9.02 DESIGN CRITERIA

Designs for bridges and culverts shall be in accordance with the "*Standard Specifications for Highway Bridges, American Association of State Highway and Transportation Officials (AASHTO)*" or as amended by the "*New Jersey Department of Transportation Design Manual Bridges*" or the County Engineer.

9.03 SOILS INVESTIGATIONS AND FOUNDATION REPORTS

a. Soil Borings

(1) A minimum of four (4) soil borings will be required for all new structures and two (2) soil borings for the widening of an existing structure.

(2) The quantity and the location of the soil borings will be subject to the approval of the County Engineer.

(3) Soil borings shall be performed to a minimum depth of twenty five feet (25'). Where rock is encountered, it is to be cored for a minimum of ten feet (10').

b. When circumstances dictate, laboratory tests on soil and rock samples shall be performed.

c. Upon completion of the soil borings and laboratory testing a foundation report shall be submitted to the County Engineer for review. The foundation report shall include the following:

(1) General project description.
(2) Typed boring logs.
(3) Typed laboratory test results.
(4) Existing ground elevation at each boring location.
(5) Groundwater elevation for each boring.
(6) Boring location plan.
(7) Soils description and foundation design criteria.
(8) Recommended type of foundation.
(9) Elevation of existing and/or proposed footings.
(10) Proposed method of dewatering, where necessary.
(11) Estimated depths of scour, where applicable.

9.04 BRIDGE AND CULVERT TYPES

a. New Bridges

(1) New bridges, with spans twenty feet (20') or greater, are to be constructed with reinforced concrete and prestressed concrete elements to provide a maintenance free structure.

(2) The use of steel or timber bridge types will only be considered it there is adequate justification in the opinion of the County Engineer.

b. New Culverts

(1) New culverts, with spans less than twenty feet (20'), shall be constructed with reinforced concrete and precast concrete elements. The use of a box culvert versus an arch will be

considered on a case by case basis.

(2) The use of metal culverts will only be considered for special applications.

c. Existing County Bridges and Culverts

Where existing County structures are to be lengthened to provide for road widening the structure types shall be in accordance with the above sections of these standards or as directed by the County Engineer.

9.05 BRIDGE SUPERSTRUCTURE

a. The superstructure for bridges shall consist of prestressed concrete beams with a reinforced concrete deck. The prestressed beams shall be slab, box or I-beams as needed by design.

b. All beams shall be provided with top stirrups to create composite action with the deck slab.

c. All bridges shall have a waterproofing membrane placed directly on the deck if a bituminous concrete wearing surface is to be installed.

9.06 BRIDGE SUBSTRUCTURE

a. Substructures for bridges shall be constructed with cast-in-place, reinforced concrete.

b. The minimum depth for the substructure footings, measured from the bottom of the footing to the stream bed elevation, shall be five feet (5').

c. A keyway shall be provided in the footing for the placement of the stem concrete.

9.07 PRECAST CONCRETE CULVERTS

a. Precast concrete arches and box culverts shall be fabricated by a reputable manufacturer that is approved by the Warren County Engineer.

b. Footings, wingwalls and headwalls shall be cast-in-place, reinforced concrete.

c. Four-sided box culverts shall have a cast-in-place, reinforced concrete, cut- off wall constructed at each end of the culvert. The cutoff wall shall be a minimum of two feet (2') wide, extend the full width of the culvert, and project down four (4') below the stream bed elevation.

d. Footing dimensions for three-sided box culverts and arches shall be determined by design.

e. The minimum footing thickness shall be two feet (2') and the minimum footing width shall be five feet (5').

f. The minimum depth for the substructure footings, measured from the bottom of the footing to the stream bed elevation, shall be five feet (5').

g. The use of precast concrete wingwalls will be considered upon request on a case by case basis. The stem and footing for precast concrete wingwalls shall have a minimum thickness of twelve

inches (12").

h. All new precast concrete culverts shall have epoxy coated reinforcing steel bars in the top mat of the top slab of the structure.

i. All culverts shall have waterproofing membrane placed directly on the structure or within the asphalt layers of the roadway as directed by the County Engineer.

9.08 PARAPETS, RAILINGS AND APPROACH SAFETY DEVICES

a. Parapets and Railings

(1) Parapets, railings or a combination of both, suitable for bicycle traffic, shall be provided on all new bridges and culverts. The proposed railing system for each structure will be reviewed by the County Engineer on a case by case basis.

(2) Parapets and headwalls shall have a minimum thickness of twelve inches (12"). If guiderail is to be mounted on parapets, headwalls or wingwalls, the minimum thickness shall be eighteen inches (18”).

b. Guide Rail

(1) Approach guide rail shall be provided to the appropriate limits as dictated by the site conditions or directed by the County Engineer. Breakaway Cable Terminals (BCT) shall be used at the ends of all approach guide rail.

(2) Transition or attachment of the approach guide rail at the structure will be determined based on the type of parapet and railing system that is to be used.

c. Traffic Control Devices

(1) Object markers are to be installed at all four (4) corners of the bridge or culvert.

(2) Delineators will be required along the approaches as directed.

(3) Roadway signs may be required in conjunction with a bridge or culvert project. Signs will be provided as specified in the “*Manual on Uniform Traffic Control Devices for Streets and Highways”*.

9.09 SECTION WIDTHS

a. Roadway widths on bridges and culverts will be determined based on the traffic conditions and function of the County road.

b. Roadway widths, on structures carrying local roads, will normally have a minimum width of thirty feet (30').

c. Sidewalks, six feet (6') in width, will be provided on one or both sides of all new bridges and culverts.

d. The actual width of parapets and headwalls will depend on the proposed railing system that is to be used.

9.10 DRAINAGE

a. Roadway profiles showing the proposed structure will be required for review. Roadway low points are not to be located on a structure to avoid drainage problems.

b. The use of scuppers on bridges should be avoided.

c. Weep holes or underdrains shall be provided with all abutments, wingwalls and precast culverts.

9.11 UTILITIES

Designs for culverts and bridges shall provide accommodations for all proposed utilities within a development as well as future utilities. All underground utilities shall be located outside the structure, unless an alternate location is approved by the County Engineer. Easements or additional right-of-way will be provided where necessary.

9.12 HISTORIC DISTRICTS

Structures that are located in or near an historic district may require special treatments such as stone and mortar facing, ornate railing systems, tinted concrete, etc.

9.13 SUBMITTALS AND REVIEW

a. As part of the preliminary subdivision or site plan application, a foundation report, structural design calculations, hydraulic design calculations and preliminary construction plans shall be submitted for review for a new bridge or culvert proposed to be taken over by Warren County.

b. Review and approval by the County Engineer shall be completed prior to the submittal of a stream encroachment application to the New Jersey Department of Environmental Protection (NJDEP). A representative of the County Engineer's Office will be available to attend any preapplication meetings with the NJDEP.

c. Prior to final approval, final construction plans and specifications shall be submitted with all necessary approvals.

9.14 PERMITS

A Highway Access and Construction Permit will be required for the construction of a new bridge or culvert which is to be owned and maintained by Warren County. A cost estimate, for the proposed structure work, is to be submitted for review as part of the permit application. Also, any shop drawings for the proposed structure are to be submitted for review and approval by the County Engineer prior to fabrication. Additional permit requirements can be found in these standards in Section 11.

9.15 RIGHT-OF-WAY

Sufficient right of way shall be dedicated to the Warren County Board of Chosen Freeholders or the municipality to facilitate the construction and future maintenance of the proposed bridge or culvert. The limits of the right of way dedication will be subject to the review and approval of the County Engineer. Copies of recorded deeds must be submitted to the Warren County Engineer's Office prior to final subdivision or site plan approval.

9.16 SOIL EROSION AND SEDIMENT CONTROL

A certified soil erosion and sediment control plan will be required for any bridge and culvert project. The plan shall include all temporary and permanent erosion control measures. For additional information see the section of these standards entitled "Soil Erosion and Sediment Control".

9.17 MAINTENANCE AND PROTECTION OF TRAFFIC

Detours and traffic control shall be provided as needed for each project. For further discussion relating to traffic control, see the section of these standards entitled "Maintenance and Protection of Traffic".

SECTION 10 - UTILITY IMPROVEMENTS

10.01 ABOVE GROUND INSTALLATIONS

a. All above ground utility installations should be in accordance with the standards established by the New Jersey Department of Transportation for utility accommodation in Chapter 25 of the New Jersey Administrative Code.

b. Utility companies should contact the County Engineer prior to poles being relocated or new poles installed to make sure that installations will not conflict with future road improvements.

c. Special consideration should be given for the location of poles used as utility drops for underground facilities and poles carrying fiber optic and other heavy distribution cable which are not easily relocated.

10.02 BELOW GROUND UTILITIES

a. Any poles used as utility drops for an underground service installation shall be placed outside of the road right-of-way or at the road right-of-way line. A Highway Access and Construction Permit will be required for any installation of underground facilities, including electric, telephone, and cable television services.

b. Removal of Existing Features: The existing pavement, blacktop or concrete, shall be cut in a straight line or lines, prior to any subsurface excavation, which shall be confined to the area between the cuts. If pavement, curbing, sidewalk, or other surface construction becomes damaged, ragged or zig-zagged when it comes time to repave or replace the facility, the edges shall be cut or recut in a straight line or lines to the satisfaction of the Engineer, in general parallel with the lines of the excavated trenches and in a width sufficient to accommodate the entire excavation and to create a smooth finished appearance when the construction is completed.

c. Curbs, sidewalks, driveways, etc.: Where the opening involves cutting through existing curbs, sidewalks, driveways and any other surface structures, the permittee or his contractor shall rebuild or replace such surface structures as closely as possible duplicating the original as to dimensions, grade, appearance and materials. Curbs, sidewalks, concrete aprons and other miscellaneous structures shall be reconstructed with Class "B" concrete.

d. Existing pipes, utilities, subsurface structures: Any existing subsurface pipes, utility lines, drains, foundations, abutments, inlets or other structures that may be disturbed, damaged, or removed during the necessary opening work, are to be replaced, reconstructed or repaired, under the direction of the Engineer and the appropriate officials of the utility company whose facility may be involved. Such replacement, reconstruction or repair shall be made using materials, methods and standards of workmanship as specified by the County Engineer, or in the case of a public utility facility, to the standards imposed by said utility. Caution and care shall be exercised by the permittee not to disturb such existing structures or facilities exposed by the opening and found to be in or adjacent to the opening.

e. Tunneling: In cases where it becomes necessary to resort to tunneling operations to accomplish the opening work in a most practical way, then the backfill in such tunnel shall be rammed soil composed of a mixture by volume of one part cement to six (6) parts of aggregate material such as sand or three quarter inch (¾") quarry blend stone. Tunneling shall be permitted only with the approval of the Engineer and when the need for tunneling is indicated on the application for permit. Jacking or drilling is not considered to be tunneling.

f. Jacking and drilling will be permitted when the need is indicated and when the Applicant's Engineer certifies that in his opinion other existing structures or utilities will not be disturbed or damaged thereby.

g. Blasting: No blasting shall be allowed, unless approved by the Engineer. Blasting work shall be done only by an experienced and where required, licensed dynamiter, and only after all required safety precautions have been taken and other necessary permits, if any, obtained. The Engineer may require the permittee to give such notice as the Engineer may designate to property owners in the area which the Engineer indicated may be affected by the blasting.

h. Surplus Materials: The permittee or his contractor shall remove all surplus or unusable fill,

debris and other materials from the job site at his own expense. The area shall be cleaned up and restored at the end of the work, to the satisfaction of the Engineer. Machinery, vehicles and tools of the contractor shall be promptly removed from the job site when the work has been completed.

i. Excavation

(1) The trench shall be excavated along the lines designated on the approved plans and to a depth sufficient to provide cover over the mains of not less than four feet (4'), except where greater or less depths of cover are shown on the detailed plans or are necessary due to the existence of utilities or to connect to existing lines. The trench shall be not less than one foot (1') and no more than two feet (2') wider at the bottom than the outside diameter of the pipe. Where the trench is excavated at any place below the proper grade, excepting at joints, it shall be refilled to grade with sand or loam and thoroughly compacted.

(2) No more than one hundred foot (100') of trench will be opened in advance of the utility installation, unless permitted by the Engineer. All open trenches shall be backfilled by the end of the work day.

(3) The material excavated shall be laid compactly on the side of the trench and kept trimmed up so that it will be of as little inconvenience as possible to the traveling public and to adjoining tenants. Where the streets are paved, the paving material shall be kept separate from the other materials excavated. All streets shall be kept open for travel unless otherwise approved by the Engineer.

j. Sheeting and Bracing

(1) The contractor shall furnish, put in place and maintain such sheeting and bracing, etc. as may be required to support, the sides of the excavation and to prevent any movement of earth which could in any way diminish the width of the excavation below that necessary for proper construction. If the Engineer is of the opinion that at any point sufficient or proper supports have not been provided, he may order additional supports put in at the expense of the contractor.

(2) All trenching operations will comply with *"Occupational Safety and Health Administration (OSHA) regulations 29 CFR 1926.1"*. Safety requirements and precautions for excavations will be implemented prior to that work being commenced.

k. Temporary Trench Plating

(1) All temporary trench plating shall be designed to carry all legal highway loads. The plating shall be properly supported and anchored to prevent all movement. All plating intended to be left in place over night shall be recessed into the adjoining pavement so that the top surface of the plating is flush with the pavement.

(2) Construction signs will be installed on both approaches warning the motorists of the temporary plating and that it is slippery when wet.

l. Backfilling

(1) Backfilling for utility improvements in pavement areas and shoulders or within five feet (5') of the edge of any proposed pavement will be with flowable fill or dense graded aggregate base placed in six inch (6") lifts as directed by the County Engineer. Each layer shall be compacted with flat-face mechanical tampers to ninety five percent (95%) minimum dry density. If the pipe area is not to be paved, the dense graded aggregate will be filled to the finished pavement grade.

(2) The only methods of compacting the backfill material permitted shall be mechanical compaction in lifts as specified. Consolidation will not be acceptable as a method to achieve the soil densities specified.

(3) The Engineer, at his discretion, may require, or have performed, soil density checks at randomly chosen lifts. Density testing will be performed at the completion of the compaction effort. Compaction requirements will be strictly enforced. The cost for compaction testing shall be the responsibility of the utility company.

m. Trench Restoration

(1) Bituminous Concrete and Bituminous Surface Treated Pavements

In bituminous concrete and bituminous surface treated pavements, the trench area will be restored with a four inch (4") bituminous concrete base course and a two inch (2") bituminous concrete surface course. In areas where the pavement is thicker than six inches (6"), additional bituminous base shall be placed to the depth of the existing pavement.

(2) Portland Cement Concrete Pavements

(a) In Portland cement concrete pavements and in roads with Portland cement concrete bases, the pavement shall be replaced with the same materials and in the same thickness. When the trench opening is within five feet (5') of a transverse joint, the remaining section of the slab shall be removed and replaced. The existing joint is to be reconstructed in accordance with the NJDOT Standard Detail CD-405-3.1.

(b) Care shall be taken to protect expansion joint dowels. Dowels shall be straightened after concrete removal, if disturbed. The existing expansion joint material shall be replaced prior to placing new concrete.

(c) Existing subgrade is to be brought back to proper grade and properly compacted. Any soft areas are to be removed and replaced with proper material.

(d) If the slab removal ends prior to a joint, number five (#5) bars, eighteen inches (18") long, are to be drilled and grouted in the center of the slab. Bar spacing will be six inches (6") from the slab edge and twelve inches (12") between bars. The new slab reinforcing steel shall be number four (#4) bars, twelve inches (12") on center longitudinally and number four (#4) bars, twenty four inches (24") on center transversely (minimum of two [2]), set approximately three inches (3") below the top of the finished slab.

(3) Unimproved Shoulder Areas

(a) Trenches outside the pavement required to be backfilled with dense graded aggregate base material shall be brought up to the finished shoulder grade and uniformly compacted.

(b) Trenches not requiring dense graded aggregate may be backfilled with suitable material and properly compacted. The final four inches (4") to six inches (6") of the trench shall be backfilled with topsoil, compacted, seeded, fertilized and mulched.

(4) Temporary Surfacing: Pending the actual repaving or reconstruction operations stated above, the permittee or his contractor shall provide a temporary pavement or surface over the compacted refilled opening, of such material as shall be directed by the Engineer. The contractor shall maintain, refill and temporarily repave said surface from time to time as may be required by the Engineer until a permanent pavement has been constructed to provide a properly graded traveling surface.

(5) All improvements shall be performed in accordance with the *"New Jersey Department of Transportation Standard Specifications for Road and Bridge Construction"*.

10.03 IMPROVEMENTS AT COUNTY BRIDGE AND CULVERT LOCATIONS

a. All underground utilities at stream crossings involving County bridges and culverts shall be placed under the stream bed at a location that will not impact future widening and/or reconstruction.

b. If additional right-of-way or utility easements are necessary to accommodate the utility improvements, it will be the developer's or utility company's responsibility.

c. All necessary stream encroachment and wetland permits required by the New Jersey Department of Environmental Protection shall be the responsibility of the developer or utility company.

d. At bridges where the utility can be safely accommodated on the structure, the County may consider approval of the installation on a case by case basis. All designs and plans for such installations shall be reviewed and agreed upon prior to a construction permit being issued.

10.04 RIGHT-OF-WAY MANAGEMENT

a. Counties and other local governments will see greatly increased activity by telecommunications providers seeking use of public right-of-way as a result of the Telecommunications Act of 1996. This will mean significant new trenching, street cuts, underground utility placement, pole attachments and the erection of new poles. Increased trenching and use of the right of way will impose increased costs on government in terms of shortened road life, increased road repair and maintenance, increased traffic disruption, and increased day-to-day management of street use to minimize traffic disruption.

b. It is the County's responsibility as owners and trustees of public property and rights-of-way to manage these assets for the highest and best public good. The County must protect the health, safety and welfare of the public while balancing the needs of utility companies,

telecommunications providers and other community services.

c. Management of the County right-of-way and property shall take into consideration:

(1) who may use the rights-of-way and for what purposes
(2) coordination of users and uses
(3) priorities of users and uses in allocating limited spaces
(4) safe separation of users
(5) reservation of space for future public sector needs
(6) maintenance of surface and underground facilities
(7) access to surface and underground facilities
(8) construction standards for uses placed in the rights-of-way
(9) liability, bonding and indemnity requirements for private sector users
(10) relocation requirements

d. The County will request fair and reasonable compensation for right-of-way occupancy as allowed by law.

10.05 MAINTENANCE AND PROTECTION OF TRAFFIC

The County Engineer may specify that the developer and/or utility company prepares a traffic control plan to insure the safe and expeditious movement of traffic through work zones. Any work within the County right-of-way shall be performed in conformance with the "*Manual on Uniform Traffic Control Devices for Streets and Highways"* and section 7.14 of these standards.

SECTION 11 - HIGHWAY ACCESS AND CONSTRUCTION PERMIT

11.01 GENERAL

a. No person, persons, partnership, association or corporation shall excavate, dig, test drill, tunnel, construct or reconstruct or otherwise disturb any public street, road, highway, curb, sidewalk, bridge, culvert, utility structure or other public improvement or facility located within, over or under any public right-of-way, easement, or publicly owned property of the County of Warren, for the purpose of laying, changing, repairing, connecting, constructing or maintaining any water, gas, sewer pipe, or any electric, telephone, telegraph pipes or conduits, or for any other purpose whatsoever, without first having obtained a permit from the County Engineer, in accordance with the rules, procedures, and specification herein set forth, and without having first paid the required fees and posted guarantees as required by these regulations, unless specifically exempted. These requirements include all work in the immediate area around County bridges and culverts on municipal roads.

b. No person, persons, partnership, association or corporation shall construct, widen, alter, narrow, relocate, pave or modify the grade of a driveway or change the prior existing drainage from the driveway onto the County road without first obtaining a permit from the County Engineer. The term driveway, in addition to its regularly accepted common meaning, shall also refer to any lane, way or privately owned road. A field entrance shall not be considered an existing driveway and any improvements thereto or change of use shall require a permit.

c. County Owned Rights-of-Way: The Board of Chosen Freeholders of the County of Warren reserves the right to refuse the use of its fee simple road rights-of-way to any person or entity

intending to install permanent improvement in, on or under same. This article shall only apply to County road rights-of-way which are owned in fee simple absolute by the County of Warren and shall not apply to same upon which the County simply possesses an easement for public conveyance.

d. Exemptions

(1) The provisions of this regulation shall not apply to work involved within the rights-of-way of roads or easements owned, regulated and within the responsibility of the municipalities of the County of Warren (other than the County) or the State of New Jersey, or their various departments, bureaus or agencies, except in the immediate area affecting County bridges and culverts.

(2) The provisions of this regulation shall not apply to the installation, erection, replacement or maintenance of wood utility poles for electric distribution, telephone or telegraph installations, nor to such other appurtenances such as stub poles, anchors, guys or ground lines, incidental to these poles, where such poles and appurtenances belong to any of the franchised public utility companies operating within the County.

e. Notice of Restriction on Disturbing Completed Pavement

No person shall be granted a permit hereunder to open any County road within five (5) years subsequent to the construction or reconstruction of the surface of the pavement thereon. This prohibition shall apply only to improved County roads paved with bituminous concrete overlay or portland cement concrete pavement.

Permission may be granted under circumstances where a hardship can be demonstrated and it is determined that the health, safety or welfare of the residents of Warren County would not be adversely affected. The County Engineer may include such additional terms and conditions as appropriate with the permit approval.

f. Emergency Approvals

If a request for a construction permit comes to the attention of the County Engineer and the subject matter of this request involves an imminent threat to the health, safety or welfare of the residents of the County of Warren, the County Engineer may authorize a preliminary opening subject to immediate application to the County.

g. All construction shall be governed by the current edition of the "*New Jersey Department of Transportation Standard Specifications for Road and Bridge Construction*", supplements and amendments thereto.

h. Right-of-Way Encroachment

No part of the Country road right-of-way shall be used for the conduct of private business. The County road right-of-way is to be kept clear of buildings, sales or merchandise displays, vehicular parking areas, servicing of vehicles, service equipment and appurtenances thereto.

11.02 APPLICATION

a. Application for a permit must be made on the standard forms provided by the Engineer, must be filled out completely in the number of copies specified on the form, and filed with the Engineer, along with the required nonrefundable permit fee and other exhibits that may be required, either under the terms of this regulation, or as outlined on the form. The applicant must be the property owner or facility owner and the application must be signed by the applicant or a duly authorized representative.

b. The applicant shall file, along with the permit form, an estimate of the cost of the proposed improvements and an estimate of the starting and completion dates. Cost estimates are subject to review and approval by the County Engineer.

c. Application Period

All required submittals for the permit application need to be provided within six (6) months of the date of application. After the expiration of the application period any escrow funds held by the County will be returned to the applicant. The application fee is nonrefundable.

11.03 PERMIT FEE

The permit fee submitted with the application shall be in the amount shown in the "Permit Fee Schedule" in the Appendix. This fee shall be used to cover the costs of administering the program. Additional inspection and construction administration fees are covered in a later section.

The permit fee shall be in the form of a personal or company check and is non-refundable.

11.04 PLAN INFORMATION

a. Driveways

(1) A site plan shall be provided with information which shall include property lines and boundaries, location of all existing driveways, the entire length of the proposed driveway, existing and proposed storm drainage, utilities, trees and shrubbery, existing road pavement, existing right-of-way, available site distance, existing and proposed grades, proposed driveway pavement, a turn around area outside the right-of-way, and any other information deemed necessary to properly analyze the installation. The site plan shall be drawn at a scale not greater than 1"=30'. Plans for new driveways shall be prepared by a professional engineer or licensed land surveyor.

(2) Driveway plans must include a profile at a scale not greater than 1"=30' horizontal and 1"=3' vertical of the proposed driveway location from the centerline of the County road to a point at least one hundred feet (100') from the existing edge of pavement. The driveway profile for the first twenty five feet (25') from the proposed gutter line of the County road shall be not greater than six percent (6%). The driveway profile shall show the existing and proposed centerline grades.

b. Utility Repairs and Service Connections

(1) Key Map, showing schematically the location of the proposed opening relative to surrounding streets or other key landmarks.

(2) Existing facilities such as pavement, curbing, sidewalk, driveways, drainage culverts and structures, utilities in the working area.

(3) Details of proposed opening and work to be done, including excavation, plan, profile and appropriate sections of the opening, and construction details.

c. Construction, Reconstruction and Relocations

(1) The plans required for a construction permit shall conform with the standards outlined in Section 3 "General" and Section 4 "Road and Bridge Plans, Cross Sections, Profiles and Details".

(2) Plans must show sufficient horizontal and vertical control points throughout the project.

11.05 CONSTRUCTION COST ESTIMATE

A construction cost estimate will be prepared for all work performed within the County right-of-way. The cost estimate shall show all items of work with quantities and unit costs.

11.06 PERFORMANCE GUARANTY

a. A performance guaranty in the amount equal to one hundred twenty percent (120%) of the construction cost estimate and as-built plan cost shall be provided as security for the faithful performance of all work. The performance guaranty shall be a certified check, bank draft, irrevocable letter of credit or performance bond. The performance guaranty for a residential driveway shall be certified check or bank draft only. Surety company bond forms meeting the requirement of the State of New Jersey are acceptable. The performance guaranty will be returned to the applicant upon successful completion of all work and acceptance by the County Engineer. If all work is not completed in conformance with the permit requirements, the County may, at its option, use the performance guaranty to complete all work affecting the County road, bridge, culvert or drainage system.

b. Public Utilities: Public Utilities Corporation of the State of New Jersey may, in lieu of the above performance guaranty, file a corporate bond on a yearly basis in an amount of ten thousand dollars ($10,000.00). Such corporation bond would cover all construction operations of the Public Utility Corporation within the County, thereby exempting said utility from the necessity to file performance guaranties for individual opening projects. However, such public utility corporations, operating under the terms and protection of a corporate bond, will still be required to make application for each opening permit, to file the permit fee and to pay all costs to the County.

11.07 INSPECTION AND CONSTRUCTION ADMINISTRATION FEES

The applicant shall deposit, prior to final approval of the application, a sum adequate to cover all resident project representative costs (inspection) and construction administrative costs incurred by the County. The fee will be determined by the County Engineer based on the scope of the project. Any unused funds at the completion of the project will be returned to the applicant

11.08 INSURANCE

a. The permittee and/or contractor shall continuously maintain insurance and other security for

adequate protection of all his work from damage and shall protect the County's property from damage, injury or loss arising in connection with the contract. The permittee and/or contractor shall completely indemnify the County in regard to any such damage, injury or loss. The successful bidder shall take all necessary precautions for the safety of personnel on the work site and shall comply with all applicable provisions of federal, state and municipal safety laws and building codes to prevent accidents or injury to persons on, about or adjacent to the premises where the work is being performed. The permittee and/or contractor shall erect and properly maintain at all times, as required by the conditions and progress of the work, all necessary safeguards for the protection of workmen and the public. If it becomes necessary for the permittee, either as principal or by agent or employee, to enter upon the premises or property of the County in order to construct, erect, inspect, make delivery, or remove property hereunder, the permittee hereby covenants and agrees to take, use, provide and make all proper, necessary and sufficient precautions, safeguards, and protection against the occurrence of happenings of any accidents, injuries, damages or hurt to any person or property during the progress of the work herein covered, and to be responsible for and to indemnify and safe harmless the County from the payment of all sums of money by reason of all, or any, such accidents, injuries, damages, or hurt that may happen or occur upon or about such work.

b. The permittee and/or contractor shall procure and maintain:

(1) Worker's Compensation and Employer's Liability Insurance in conformance with all statutory requirements prescribed by law, including employer's liability at a limit of $500,000 each accident, which shall be maintained in force during the life of this permit by the permittee and/or contractor, covering all employees engaged in performance of this permit in accordance with the applicable statute.

(2) General Liability Insurance with limits of not less than $1,000,000.00 for any one person and $1,000,000.00 for any one accident for bodily injury and $1,000,000.00 aggregate for property damage, shall be maintained in force during the life of the permit by the permittee and/or contractor. The permittee and/or contractor shall procure and maintain an Umbrella or Excess Policy with limits of not less than $5,000,000.00 for any one person or any one accident for bodily injury, unless a lesser limit is approved by the County. In the event more than one insured is named in the policy, a cross-liability endorsement shall be included which provides that the employees of each of the named insured are not excluded under the policy in respect to claims that are made against other named insured.

(3) Automobile Liability Insurance covering permittee and/or contractor for claims arising from owned, hired and no-owned vehicles with limits of not less than $1,000,000.00 for any one person and $1,000,000.00 for any one accident for bodily injury and $1,000,000.00 each accident for property damage, shall be maintained in force during the life of this permit by the permittee and/or contractor.

c. Lesser insurance coverages may be allowed for projects with moderate or medium liability exposure in accordance with the County's insurance coverage guidelines. Major or high hazard projects undertaken may require higher limits and specific coverages as recommended by the County's insurance agent.

d. Certificates of the required insurance as listed above shall be submitted with the Warren County Board of Chosen Freeholders listed as additional insured and the certificate holder listed as

follows:

County of Warren
Board of Chosen Freeholders
165 County Route #519 South
Belvidere, NJ 07823-1949

c/o Warren County Engineer's Office

A thirty (30) day notice of cancellation provision shall also be provided.

11.09 UNDERGROUND FACILITIES PROTECTION ACT

The *Underground Facilities Protection Act (NJSA 48:2-73 et. seq.)* requires all excavators to notify the One-Call Damage Prevention System prior to excavation or demolition. The County construction permit is not valid until the One-Call confirmation number is received by the County Engineer's Office.

11.10 SOIL EROSION AND SEDIMENT CONTROL PERMIT

A soil erosion and sediment control permit may be required for construction activities pursuant to NJSA 4:24-39 et. seq.). It is the applicant's responsibility to contact the Warren County Soil Conservation District, 224 W. Stiger Street, Hackettstown, New Jersey 07840 (908-852-2579) to determine what is required.

11.11 COUNTY SHADE TREE PERMIT

Removal or disturbance of any tree eight inches (8") or larger in diameter will require a permit from the Warren County Shade Tree Commission. It is the applicant's responsibility to obtain this permit prior to construction.

11.12 CONSTRUCTION AND INSPECTION PROCEDURES

a. Work Schedule

No work on this permit shall be performed on Saturdays, Sundays or County and legal holidays.

The County may waive this requirement only if it is in the County's best interest for public safety or construction conditions that warrant job continuation. In the event work is performed on Saturdays or legal holidays, the County will charge for the Resident Project Representative at a rate of two (2) times the hourly salary of the County employee. In the event a private consultant is providing these services, the charge will be the actual cost billed to the County if it is above the normal daily rate.

b. Accident Prevention

The Permittee and his contractor shall take all necessary precautions to ensure safety at all times with all construction related activities. The U. S. Department of Labor, "*Occupational Safety and Health Administration (OSHA) Regulations 29 CFR"* shall be complied with at all times.

The Permittee's attention is particularly directed to the requirements of the current Construction Safety Code promulgated by the New Jersey Department of Labor and Industry, Bureau of Engineering and Safety. Article 3.6 of the Construction Safety Code states the requirements regarding reporting of accidents involving injury, loss of life and property damage.

Failure to comply with applicable safety standards will result in appropriate action by the County to ensure that safety is maintained on the project.

c. Maintenance and Protection of Traffic

The developer and its contractor shall be responsible for maintenance and protection of traffic during construction along or adjacent to the County highway. The current edition of the "*Manual on Uniform Traffic Control Devices for Streets and Highways* (MUTCD)", U. S. Department of Transportation (USDOT), and all amendments thereto, shall govern the maintenance and protection of traffic during construction.

d. Commencement of Work

Prior to the commencement of work, the contractor shall call the New Jersey One-Call Damage Prevention System (1-800-272-1000) for the mark out of all underground utilities. **The permit is not valid until the permittee submits their one-call confirmation number to the Warren County Engineer's Office.**

At least twenty four (24) hours before the permittee plans to commence work under an opening permit, the permittee shall advise the local police chief (State Police barracks, if applicable) and the Engineer, that the work is to start.

e. Supervision

The permittee shall have a qualified supervisor at the site of the opening work during all working hours.

f. Inspection

The Engineer shall be given access to the construction site during progress of the work in order to observe and inspect the work. All materials, including excavated materials, are subject to inspection and approval by the Engineer. Where the planned opening will be made through, adjacent to or near an existing public utility facility, the permittee shall notify said utility company, whose representative shall be given access to the construction to observe and inspect that portion of the work involving said utility facility.

g. Protection of Private Property

Prior to starting work on the opening, it shall be the responsibility of the permittee to advise each nearby or adjacent property owner, whose property will be temporarily inconvenienced or disturbed by the project when the work will be commenced and what effect the work will have on the owner's use of his property. The permittee will be solely responsible for any damage, inconvenience or disruption to nearby or adjacent properties, and will save the County harmless from any claims arising from the conduct of work. It will be the permittee's obligation and responsibility to arrange for any rights of entry or easements needed. The permittee shall not

store tools, machinery, materials, dirt or debris on private property. The permittee shall not use water, electricity, telephone or other private facilities without first obtaining permission from the property owner.

h. Conduct of the Work

The work shall be done in an efficient and workmanlike manner and in accordance with the plans and specifications, using proper tools, machinery, materials and manpower to effect a quality and expeditious job. Failure to perform in a manner satisfactory to the Engineer according to the standards set forth herein may result in revocation of the permit. Where the Engineer deems it necessary for the protection of the public, or to proper installation of the permittee's facilities, he may order a cessation of work by the permittee pending such action by the Board of Chosen Freeholders, provided that such cessation order by the Engineer may in no event exceed eight (8) days in duration. Except under emergency conditions, all work will be conducted between the hours of 7:00 A.M. and 7:00 P. M. or dusk, whichever comes first.

i. Street Closings

The contractor shall not close or obstruct any streets, sidewalks, alleys or passageways unless specifically authorized. No material whatsoever shall be placed or stored in streets, alleys or passageways. The contractor shall conduct its operations so as to interfere as little as possible with the use ordinarily made of any roads, streets, driveways, alleys, sidewalk facilities, etc., near enough to the work to be affected thereby.

j. Cleanliness

If dust, dirt, air pollution, poor housekeeping or detrimental material are allowed to exist, occur or continue as a result of the work to the point where the public is unduly inconvenienced or disturbed, in the opinion of the Engineer, the Engineer may stop the work until the situation complained of is eliminated. Streets are to be kept broom-cleaned on a daily basis. If dust persists, streets may be required to be hosed clean; the Engineer may direct the permittee or his contractor to spread dust inhibiting chemicals.

11.13 AS-BUILT CONSTRUCTION PLANS

Surveyed as-built locations, dimensions, elevations and information shall be provided on the approved design plans so that the County Engineer can compare the information and verify that the construction conforms to the approved design. Upon approval of the as-built construction, final plans with the as-built information shall be prepared and submitted to the County.

One set of reproducible as-built county road and/or bridge improvement plans prepared in ink on 4 mil mylar and in AutoCAD format on a standard compact disk or other approved media, shall be submitted to the County Engineer upon completion and approval of all improvements. Plan sheet size shall be twenty four inches (24") x thirty six inches (36"). The compact disk needs to include necessary font files, image files, files for plotting (i.e. .pc2, .ctb, etc. files), XRef drawing files and any other files connected to the AutoCAD drawing files that are on the disk.

The performance guaranty posted with the County shall not be released until the as-built process is satisfactorily completed.

11.14 MAINTENANCE GUARANTY

The permittee shall provide a maintenance guaranty in the amount of five percent (5%) of the final construction cost to be in effect for a minimum period of one (1) year. The maintenance guaranty shall be a certified check, bank draft, letter of credit or maintenance bond. Residential driveway applications will not require posting a maintenance guaranty.

11.15 PERMIT DURATION AND EXTENSIONS

a. Permit Duration: Permits for most work shall be in effect for one (1) year from the date issued. After said date, the permit will be void and a new permit must be obtained. If an extension is necessary to complete all work included under the permit, a request in writing must be made to the Engineer's office. The County Engineer will decide if any extension will be granted and its duration.

b. Permit Extensions: A permit may be renewed or extended for a period of time not to exceed the total time of the original permit, upon request of the permittee and upon payment of an additional fee.

c. Permits issued under the provisions of this regulation are not transferable.

d. Expiration of permits: Permits issued under the provisions of this regulation will expire at midnight of the day indicated on said permit, or the day of expiration of any extension to said permit. Permits may also be revoked at any time if it is found by the Engineer that the permittee has failed to comply with the provisions of this regulation or the permit, provided that written notice has been given to the permittee of such failure and then the permittee has failed to correct the defect complained of in said notice. If after permit revocation, it becomes necessary for the County to either complete the work or to refill and repair the opening, the cost of such work by the County will be deducted from any performance or inspection fees that may have been paid by the permittee, or if a surety or corporation bond has been given, then said bond will be declared to be in default to the extent of said unpaid costs.

11.16 VIOLATIONS AND PENALTIES

a. Violations

Any person or persons, firm or corporation violating any section of this regulation which results in damage to or obstruction of any public road, gutter, storm drain, ditch, basin, inlet or culvert shall be responsible for all expenses incurred by the County of Warren for repairing said damage, removing said obstruction in addition to the penalties herein provided.

b. Penalties

Any person or persons, firm or corporation violating any section of this regulation shall, upon conviction thereof, be subject to a fine not to exceed $500.00 or imprisonment for a period not to exceed ninety (90) days or both, each and every day that said violation continues shall constitute a separate and specific violation.

NOTE: ADDITIONS, DELETIONS AND CHANGES WILL BE MADE TO THESE DETAILS AS NEEDED BASED ON CURRENT ENGINEERING PRACTICE.

WARREN COUNTY STANDARD DETAILS

TABLE OF CONTENTS

DRAINAGE DETAILS

D1	1/28/10	INLET TYPE "A"
D2	1/28/10	INLET TYPE "B"
D3	1/28/10	INLET TYPE "D"
D4	1/28/10	INLET TYPE "E"
D5	1/28/10	MODIFIED INLETS
D6	1/28/10	TYPICAL TRENCH SECTION UNPAVED SHOULDER AREAS
D7	1/28/10	TYPICAL TRENCH SECTION PAVED AREAS
D8	1/28/10	COMBINATION AND UNDERDRAIN
D9	1/28/10	CURB TREATMENT AT TYPE "B" INLET
D10	1/28/10	ECO FRIENDLY INLET CURB PIECE
D11	1/28/10	SLOPE PROTECTION HAYBALE SEDIMENT BARRIER
D12	1/28/10	INLET PROTECTION HAYBALE SEDIMENT BARRIER
D13	1/28/10	SILT FENCE
D14	1/28/10	VEGETATIVE MATTING INSTALLATION

GUIDE RAIL DETAILS

10/22/10	GUIDE RAIL DETAILS, 1 OF 4 (24"x36" SHEET)
10/22/10	GUIDE RAIL DETAILS, 2 OF 4 (24"x36" SHEET)
10/22/10	GUIDE RAIL DETAILS, 3 OF 4 (24"x36" SHEET)
10/22/10	GUIDE RAIL DETAILS, 4 OF 4 (24"x36" SHEET)

LANDSCAPING DETAILS

L1	1/28/10	DECIDUOUS TREE PLANTING
L2	1/28/10	SHRUB PLANTING

ROADWAY DETAILS

R1	1/28/10	CONCRETE PAVEMENT TRENCH RESTORATION
R2	1/28/10	DEPRESSED CURB
R3	1/28/10	9" x 18" CONCRETE VERTICAL CURB
R4	7/01/10	CURB AND SIDEWALK
R5	7/01/10	MONOLITHIC CURB AND SIDEWALK
R6	7/01/10	CONCRETE DRIVEWAY SLAB
R7	7/01/10	CURB, PLANTER AND SIDEWALK
R8	7/01/10	TYPICAL RAMP

TRAFFIC, SIGN & SIGNAL DETAILS

T1	11/30/10	TYPICAL SIGN INSTALLATION
T2	1/28/10	TYPICAL STRIPED LANE WIDTHS
T3	1/28/10	SIGHT DISTANCE REQUIREMENTS FOR STREETS & DRIVEWAYS
T4	1/28/10	TYPICAL RESIDENTIAL DRIVEWAY
T5	1/28/10	TYPICAL MINOR DRIVEWAY
T6	1/28/10	TYPICAL INTERSECTION/MAJOR DRIVEWAY
T7	1/28/10	MINIMUM DESIRABLE TYPICAL SECTION – MINOR ARTERIAL
T8	1/28/10	MINIMUM DESIRABLE TYPICAL SECTION – MAJOR COLLECTOR
T9	1/28/10	MINIMUM DESIRABLE TYPICAL SECTION – MINOR COLLECTOR
T10	11/30/10	W16-8 & W16-8a ADVANCE STREET NAME PLAQUE

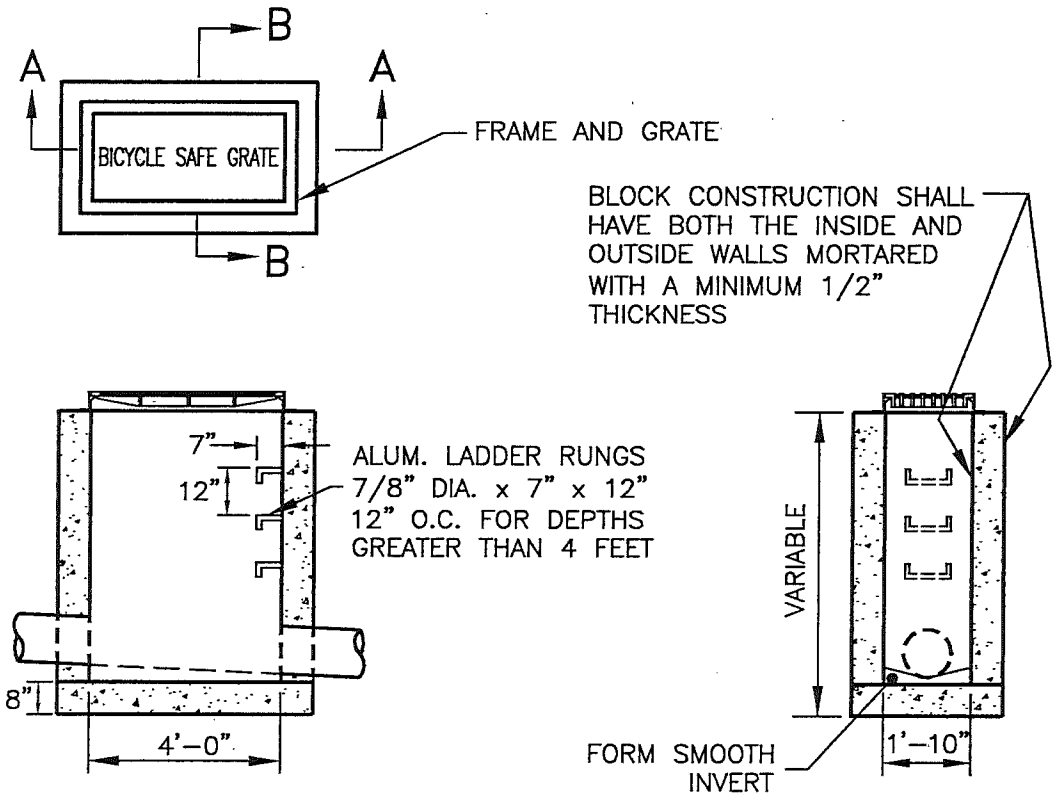

SECTION A–A

SECTION B–B

INLET TYPE "A"

Scale: 1/4"=1'

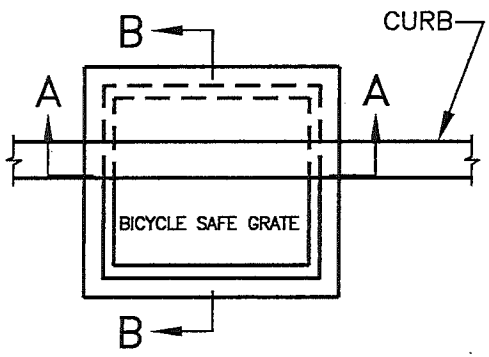

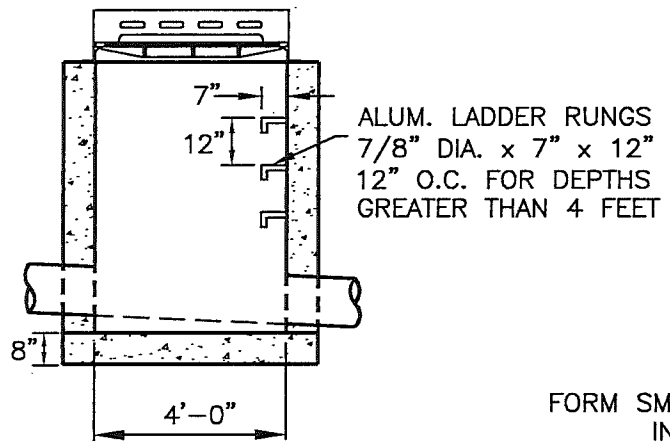

SECTION A-A

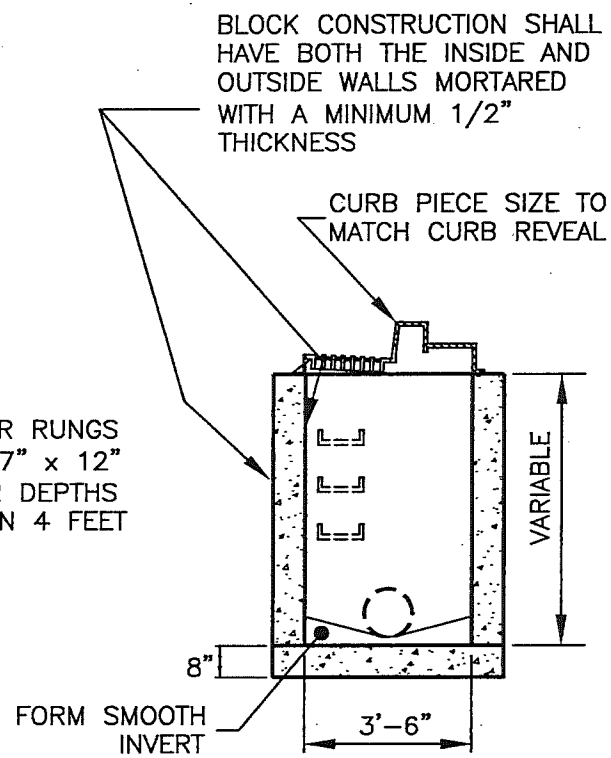

SECTION B-B

INLET TYPE "B"

1/4"=1'

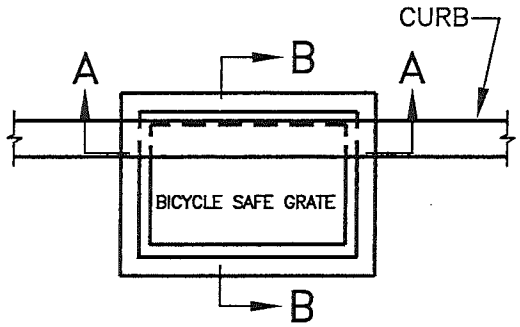

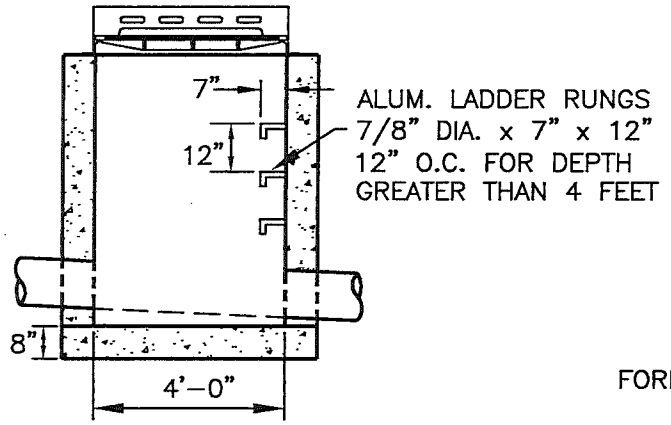

SECTION A-A

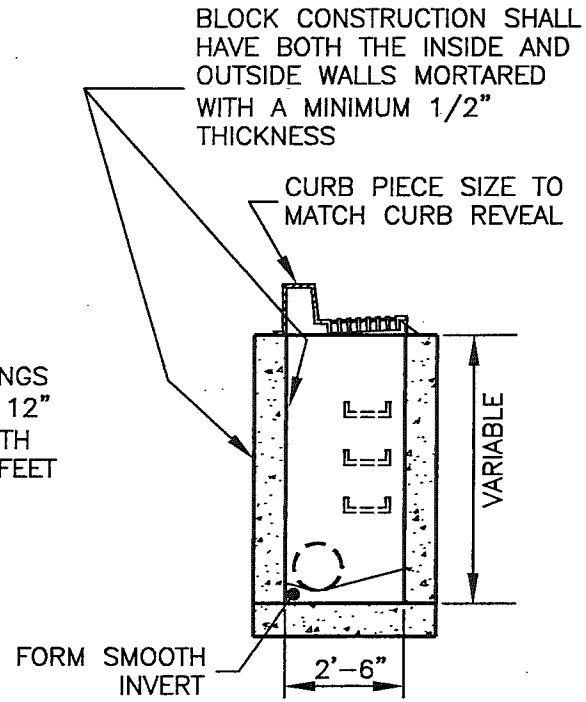

SECTION B-B

TYPE 'D' INLET

Scale: 1/4"=1'

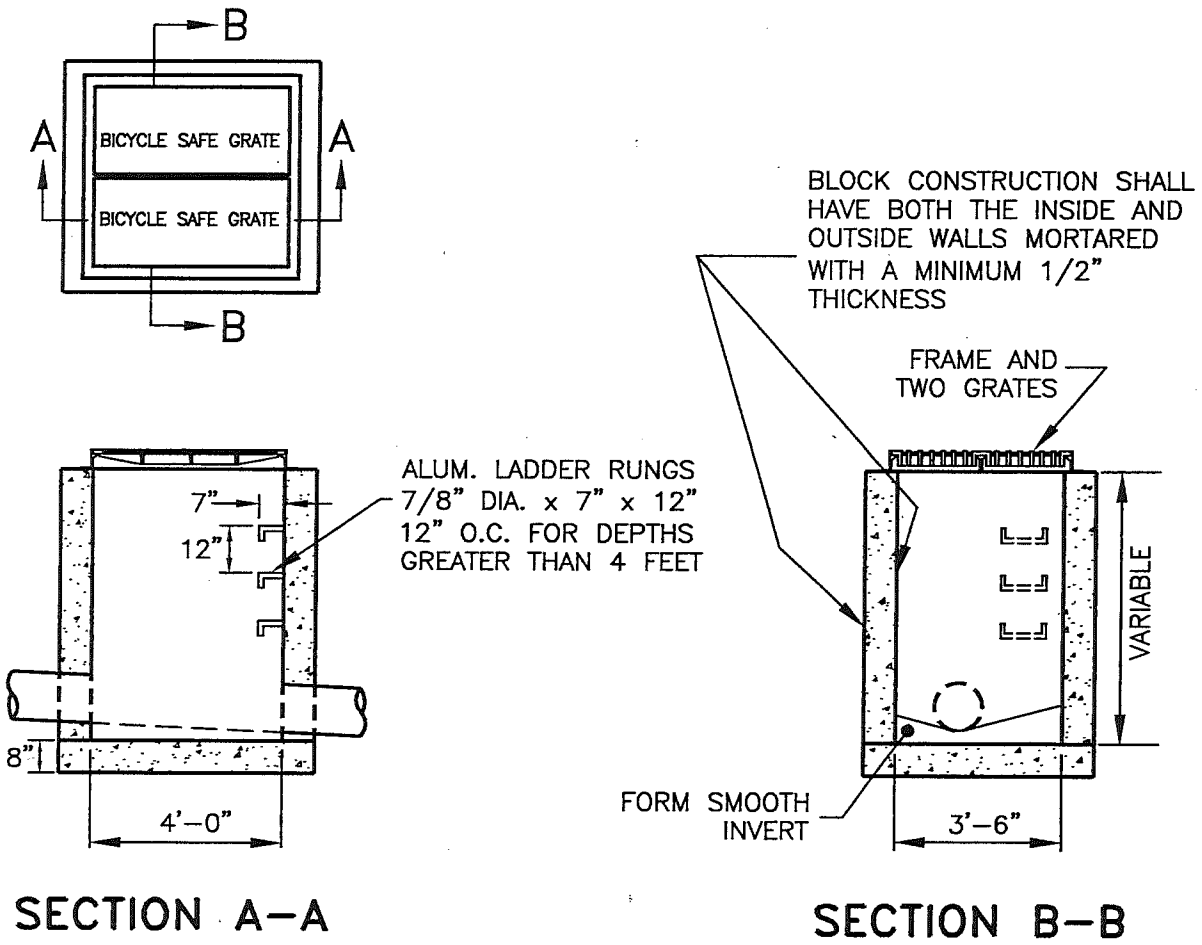

INLET TYPE "E"

1/4"=1'

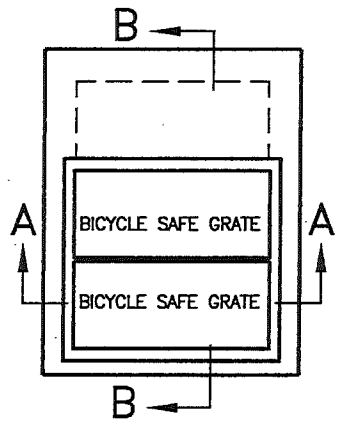

INLET TYPE	DIMENSION X	DIMENSION Y
A1	1'–0"	2'–10"
A2	2'–0"	3'–10"
A3	3'–0"	4'–10"
A4	4'–0"	5'–10"
B1	1'–0"	4'–6"
B2	2'–0"	5'–6"
B3	3'–0"	6'–6"
B4	4'–0"	7'–6"
E1	1'–0"	4'–6"
E2	2'–0"	5'–6"
E3	3'–0"	6'–6"
E4	4'–0"	7'–6"

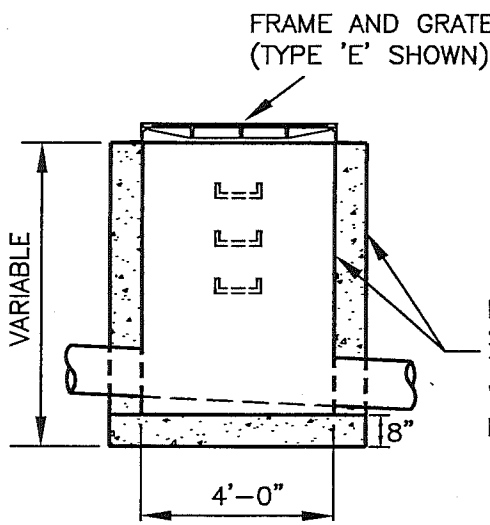

SECTION A–A

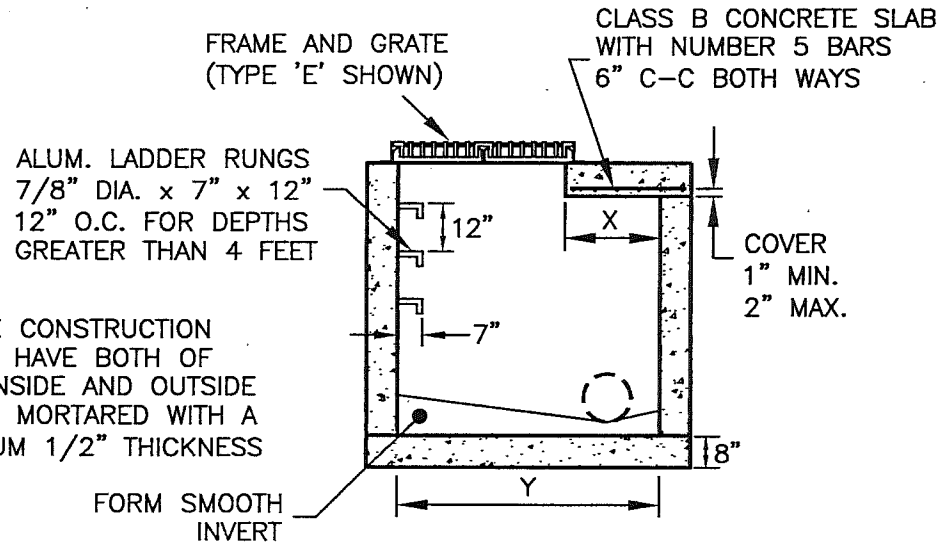

SECTION B–B

MODIFIED INLETS

Scale: 1/4"=1'

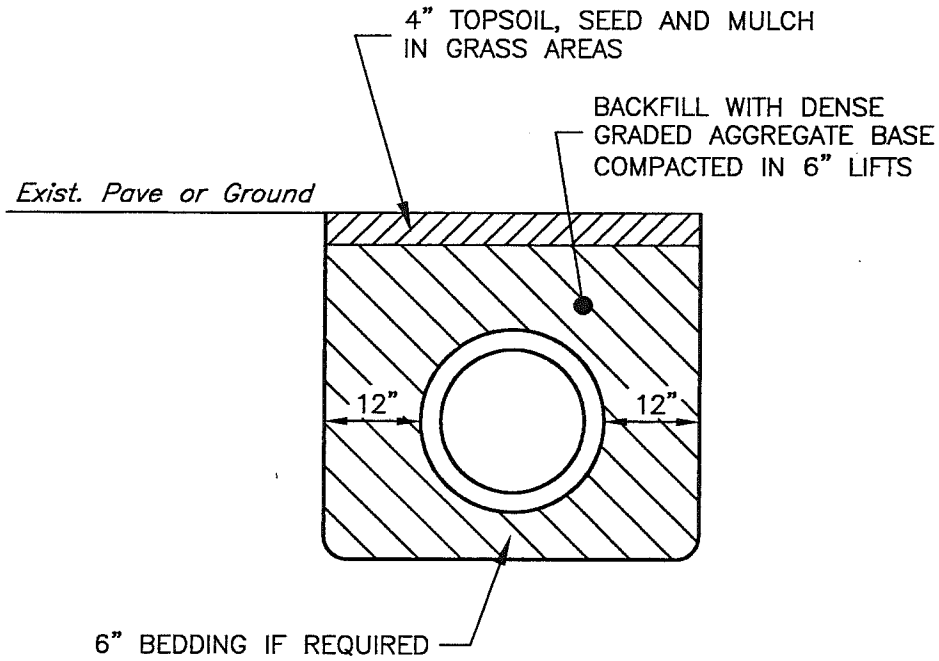

TYPICAL TRENCH SECTION

UNPAVED SHOULDER AREAS

Scale: 1/2"=1'

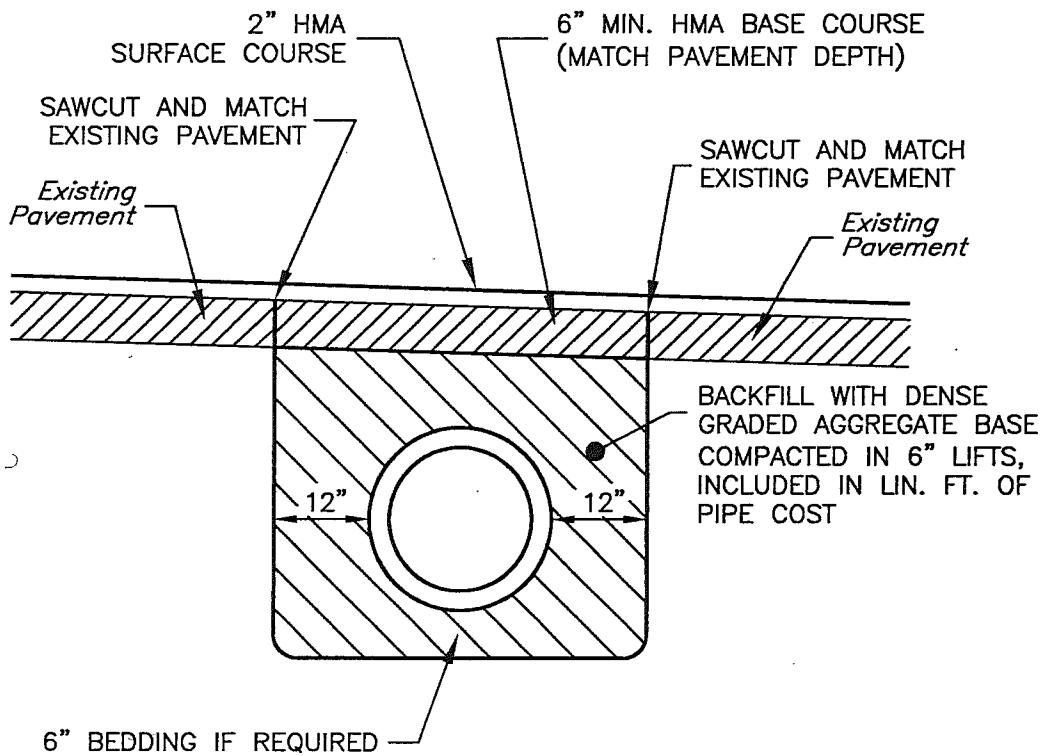

TYPICAL TRENCH SECTION

PAVED AREAS

Scale: 1/2"=1'

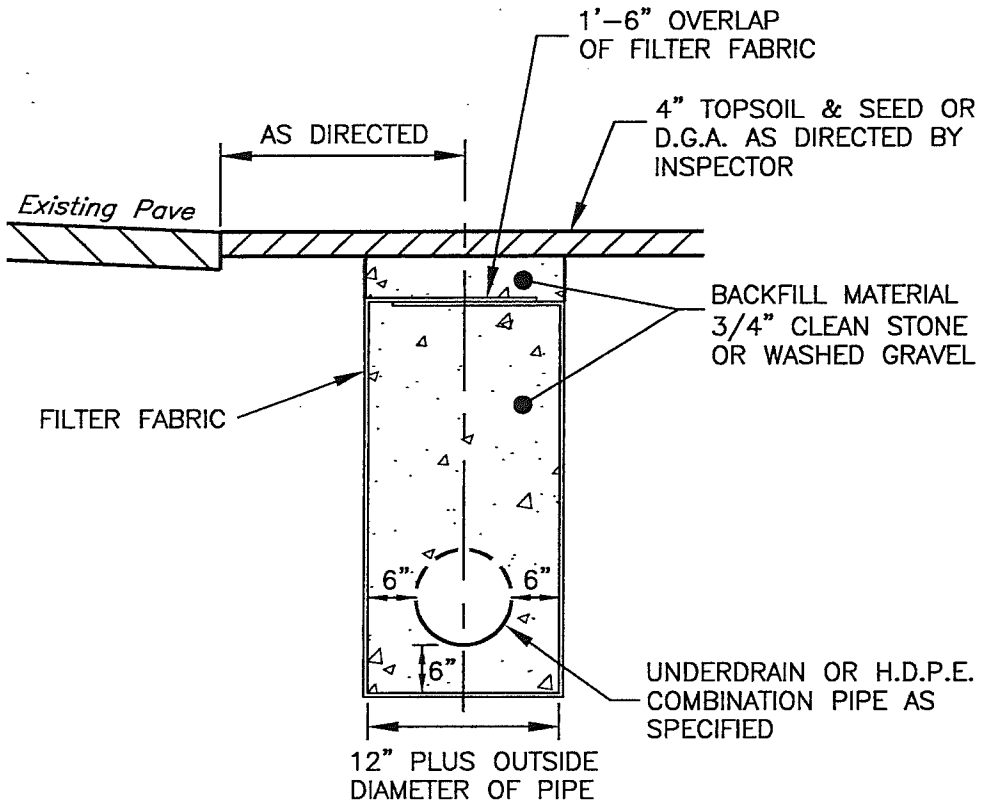

COMBINATION AND UNDERDRAIN

Scale: 1/2"=1'

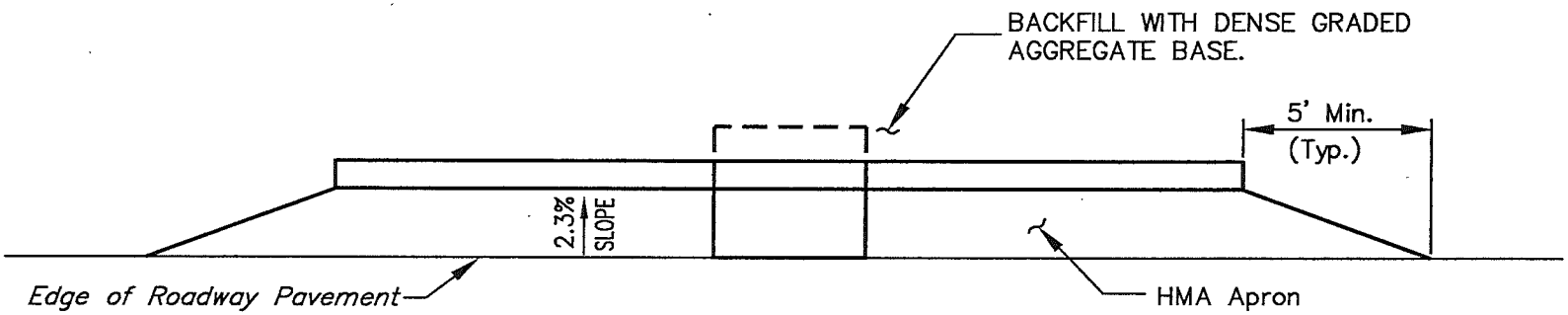

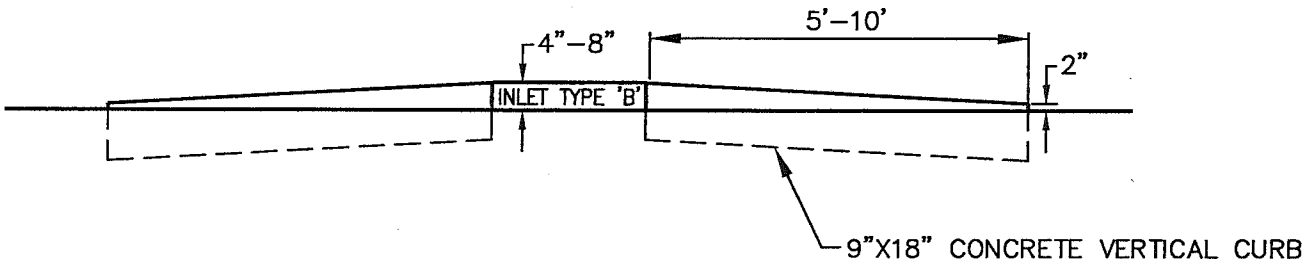

CURB TRANSITION AT TYPE "B" INLET

Scale: 1"=5'

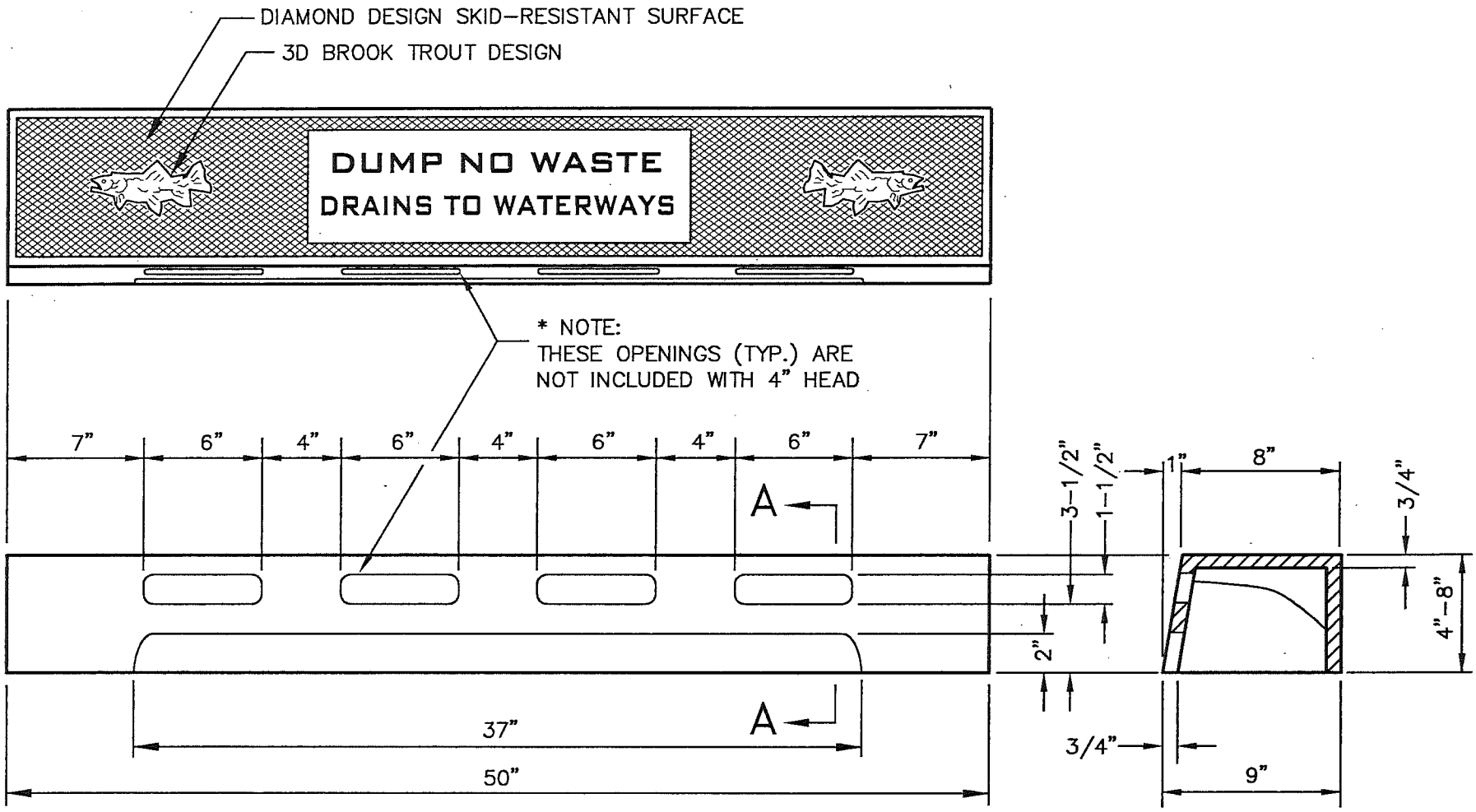

FRONT ELEVATION *4",6",8" HEAD

SECTION A-A

ECO FRIENDLY INLET CURB PIECE

Scale: 1½"=1'

FILE: 01 DRAWINGS\00-WCE-STANDARDS\DETAILS\DRAINAGE-DETAILS 1/28/10

D10

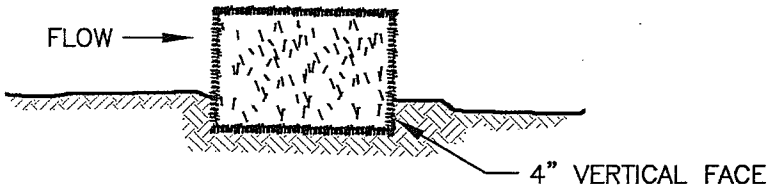

EMBEDDING DETAIL

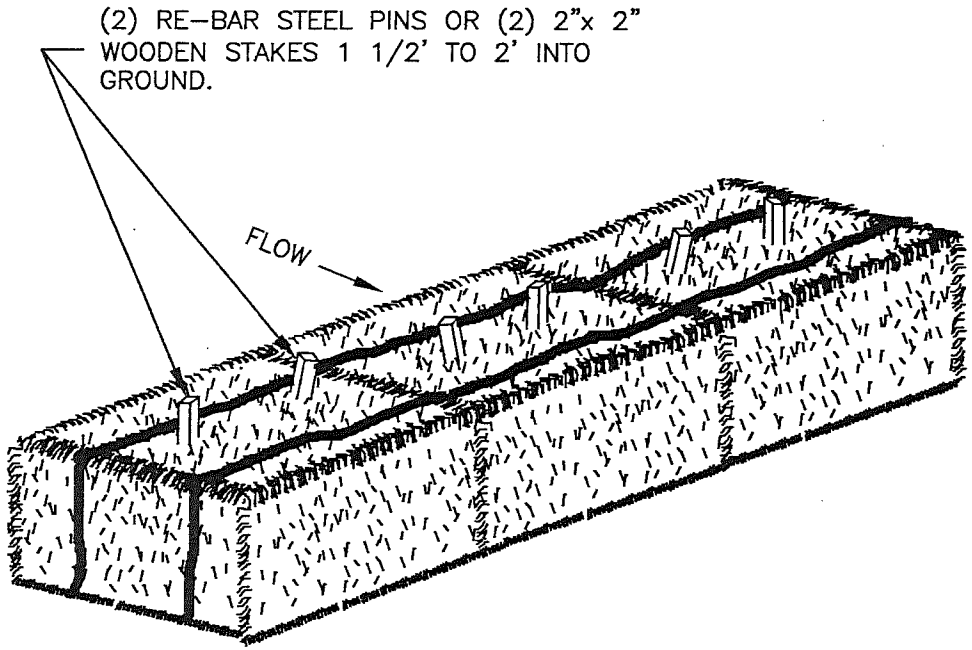

ANCHORING DETAIL

SLOPE PROTECTION

HAYBALE SEDIMENT BARRIER

N.T.S.

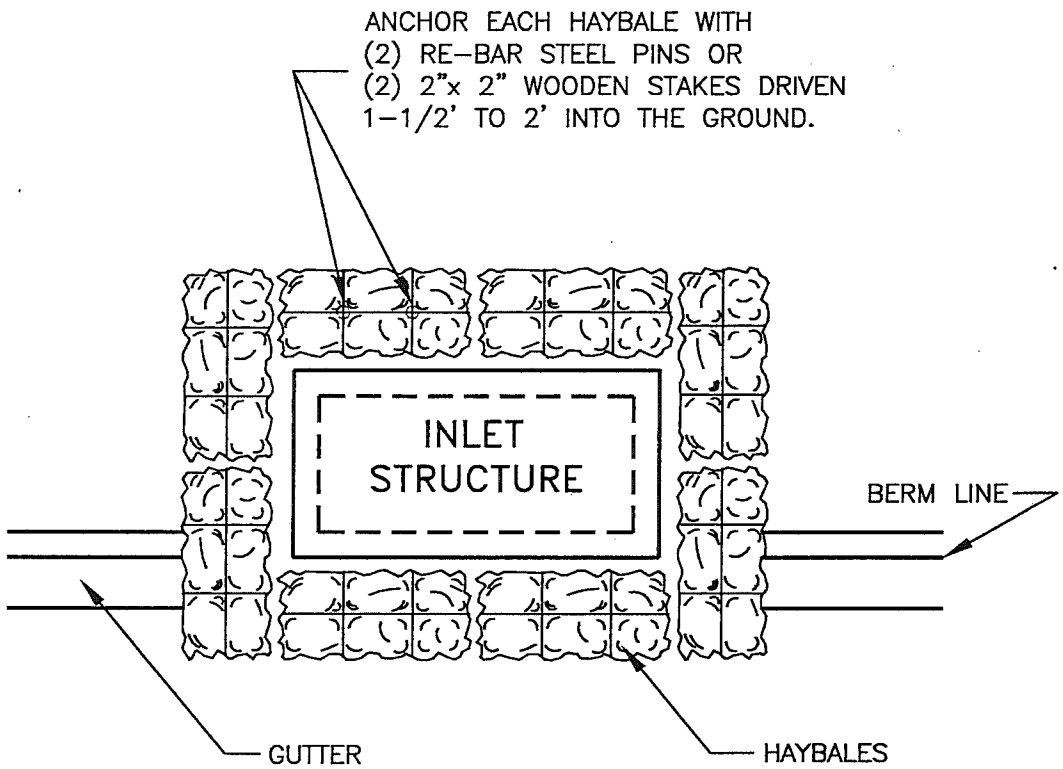

NOTE: WHERE STAKING IS NOT PRACTICAL, HAYBALES SHALL BE TIED TOGETHER TO PREVENT MOVEMENT.

INLET PROTECTION

HAYBALE SEDIMENT BARRIER

N.T.S.

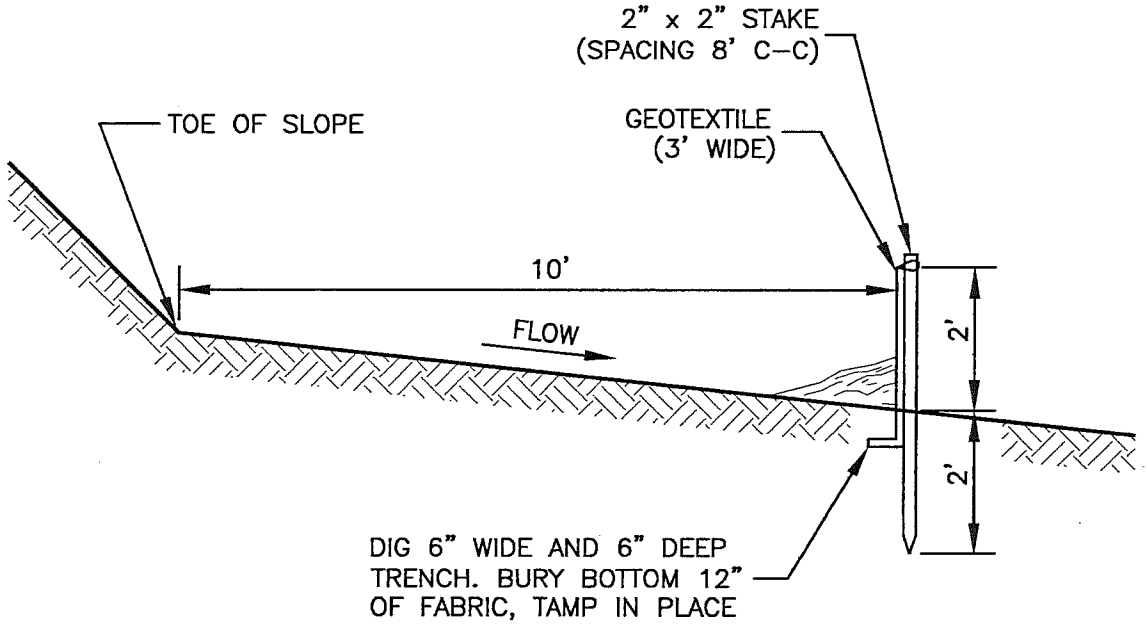

SILT FENCE

Scale: 3/8"=1'

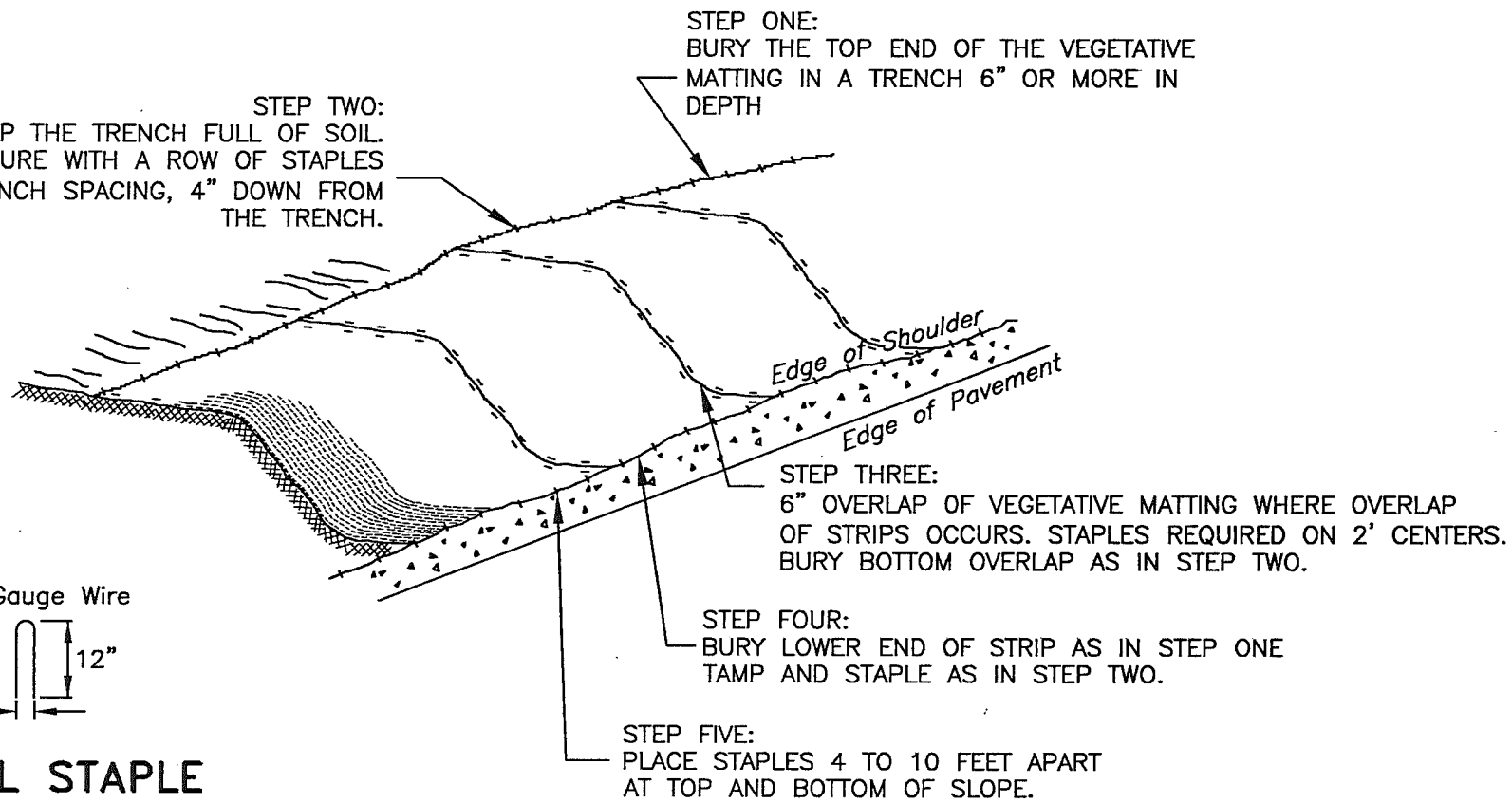

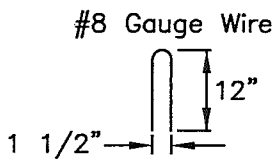

TYPICAL STAPLE

VEGETATIVE MATTING INSTALLATION

N.T.S.

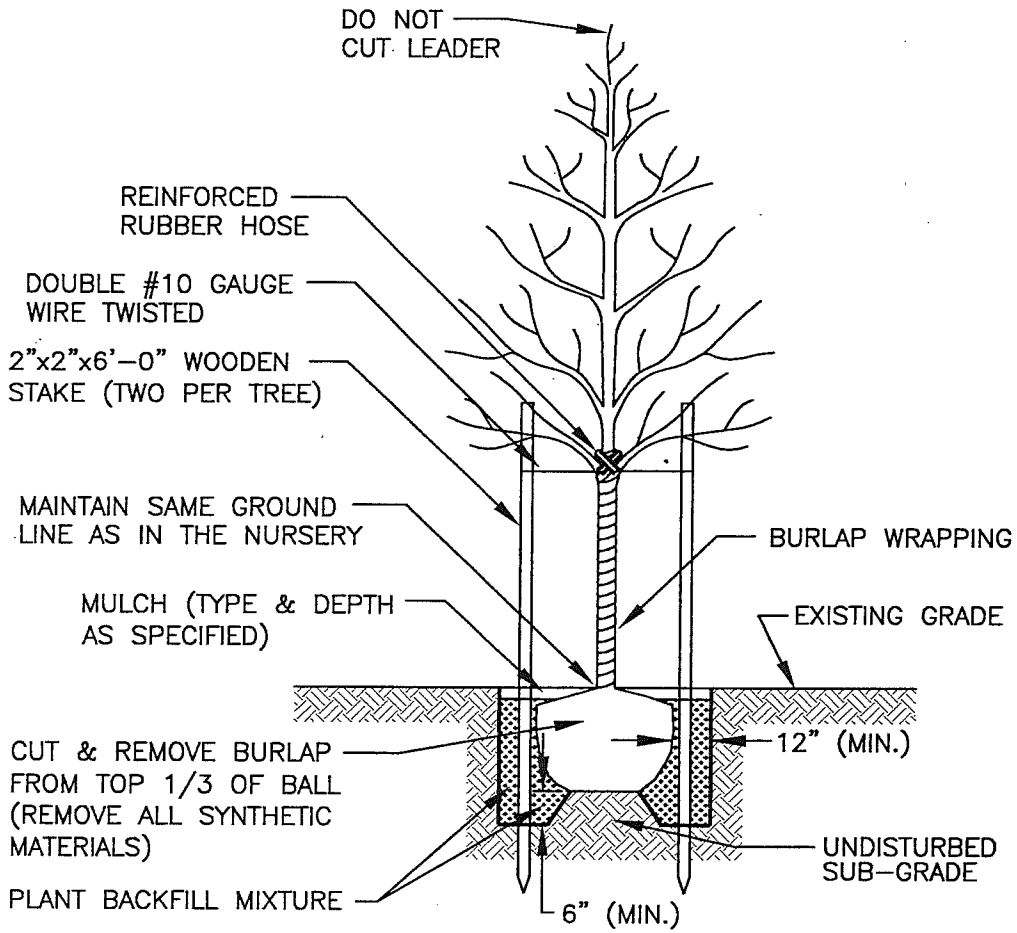

DECIDUOUS TREE PLANTING

N.T.S.

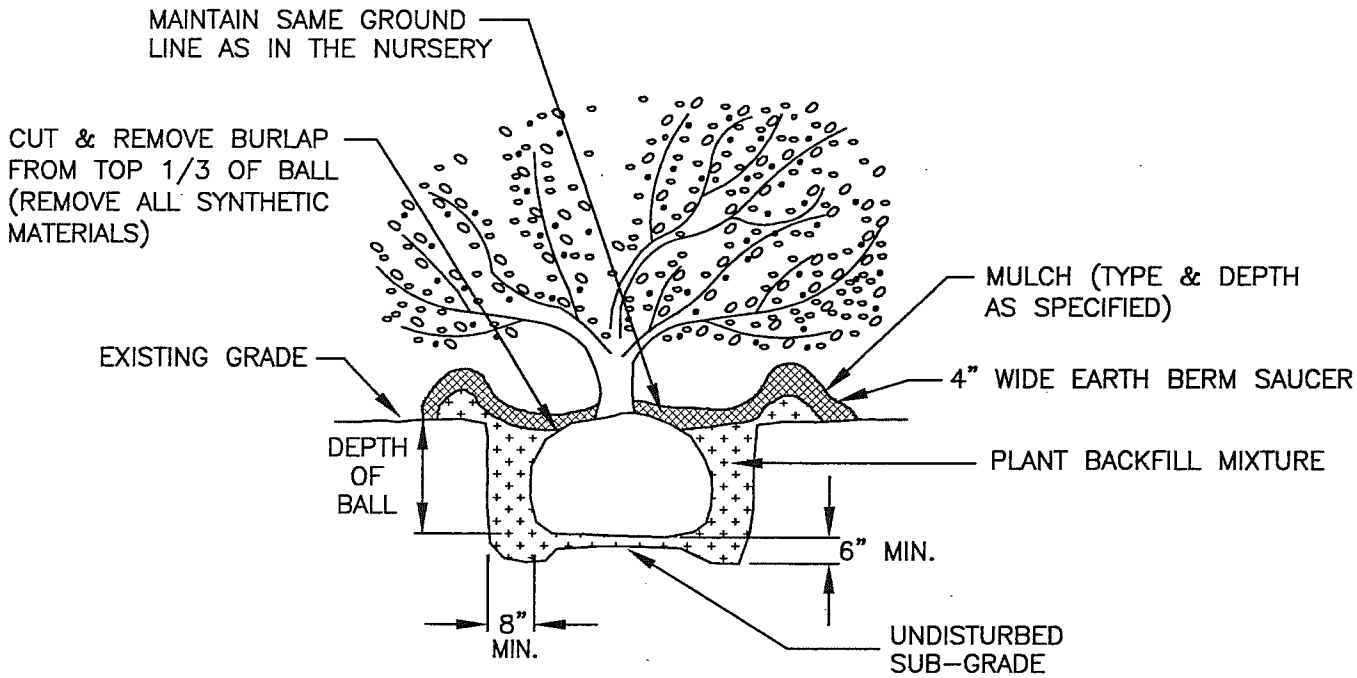

SHRUB PLANTING

N.T.S.

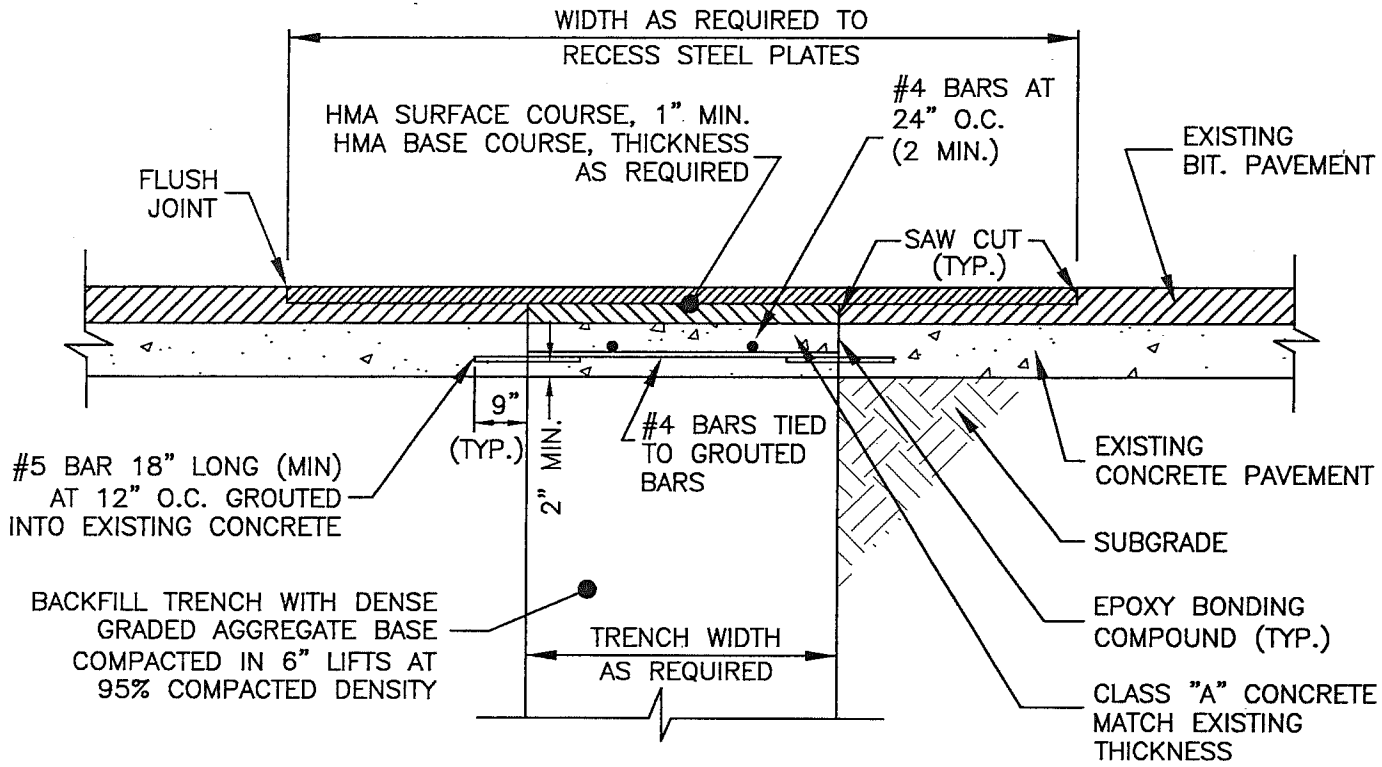

CONCRETE PAVEMENT TRENCH RESTORATION

N.T.S.

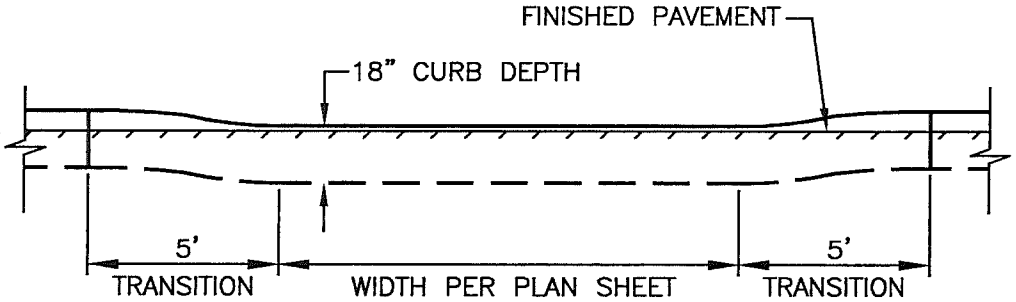

ELEVATION VIEW

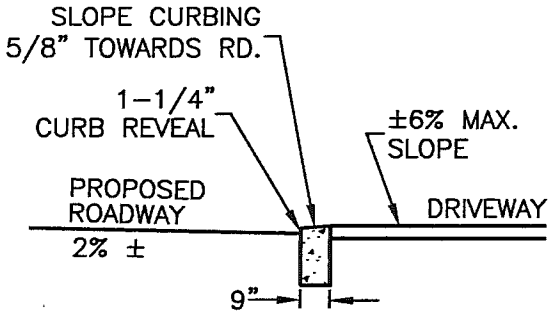

PROFILE VIEW

DEPRESSED CURB

Scale: 1"=5'

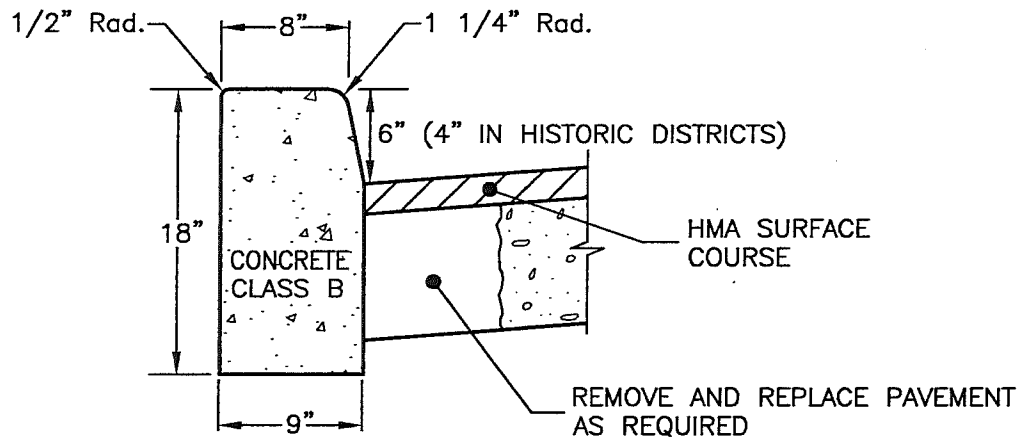

Where required by engineer transverse joints 1/2" wide shall be installed in the curb and shall be filled with preformed bituminous–impregnated fiber joint filler, complying with the requirements of A.A.S.H.T.O. spec. M–213, recessed 1/4" in from front face and top of curb. Expansion joints thru and adjacent to the curb shall be included in the unit price bid for curb.

9"x18" CONCRETE VERTICAL CURB

Scale: 1"=1'

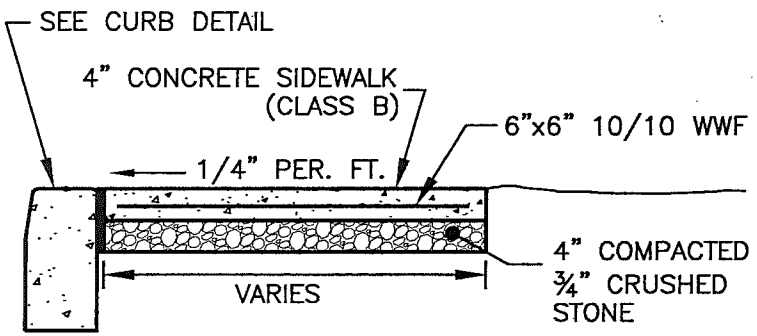

Between curbing and sidewalk shall be installed 1/2" wide preformed bituminous–impregnated fiber joint filler, complying with the requirements of A.A.S.H.T.O. spec. M–213, recessed 1/4" in from the top of curb and sidewalk. All expansion joints shall be included in the unit price bid for curbing and sidewalk.

CURB AND SIDEWALK

Scale: 1"=2'

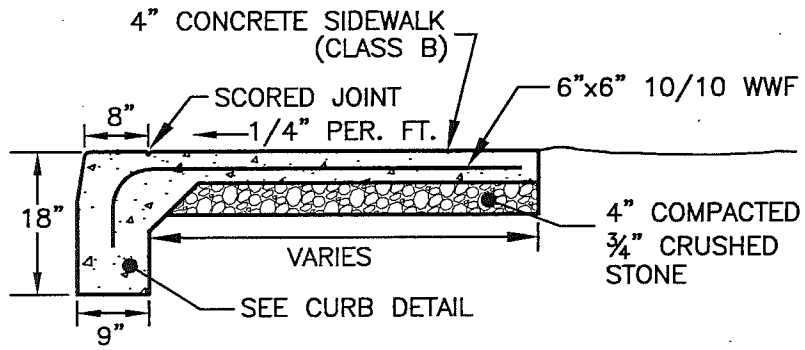

MONOLITHIC CURB AND SIDEWALK

Scale: 1"=2'

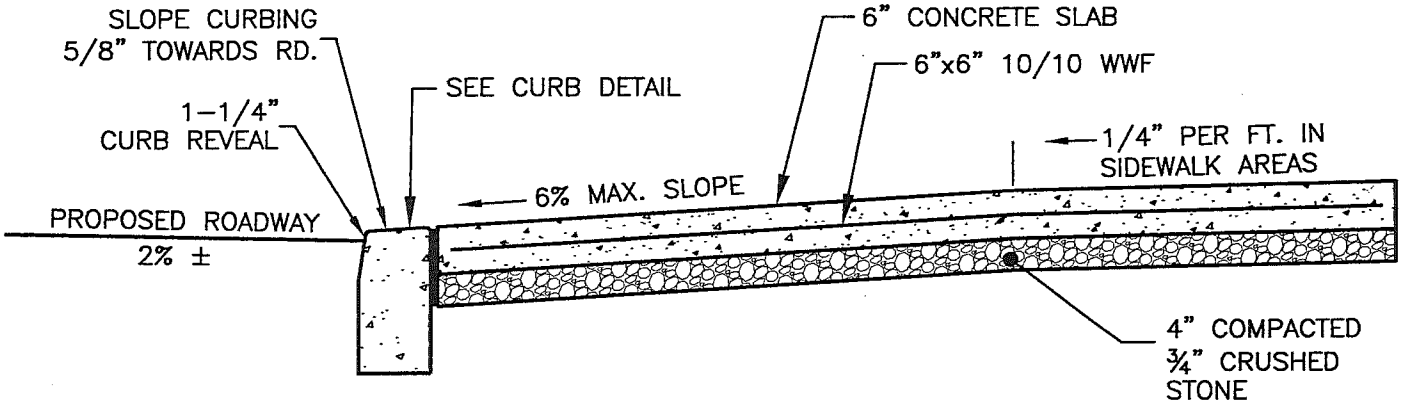

Between curbing and slab shall be installed 1/2" wide preformed bituminous-impregnated fiber joint filler, complying with the requirements of A.A.S.H.T.O. spec. M-213, recessed 1/4" in from the top of curb and slab. All expansion joints shall be included in the unit price bid for curbing and slab.

CONCRETE DRIVEWAY SLAB

Scale: 1"=2'

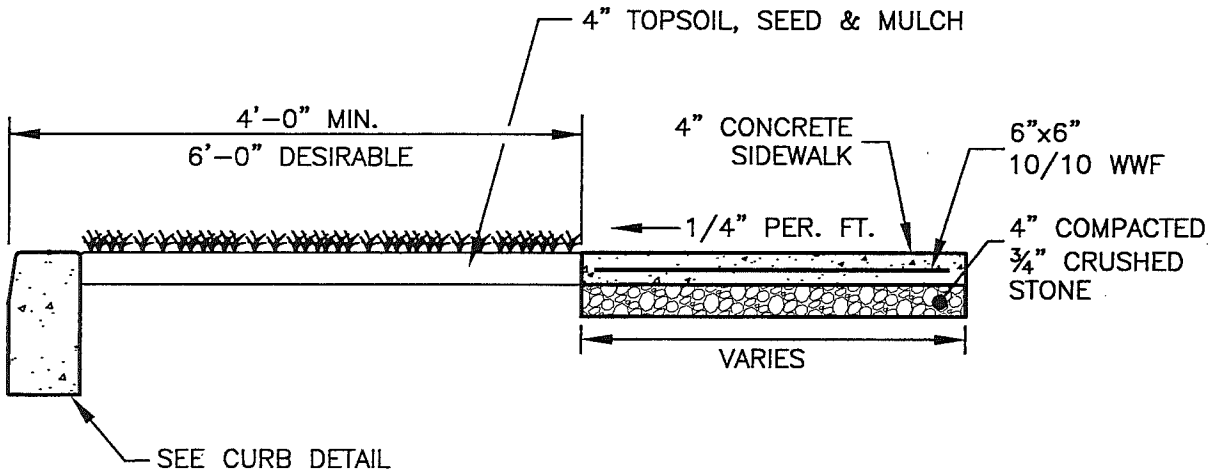

CURB, PLANTER & SIDEWALK

Scale: 1"=2'

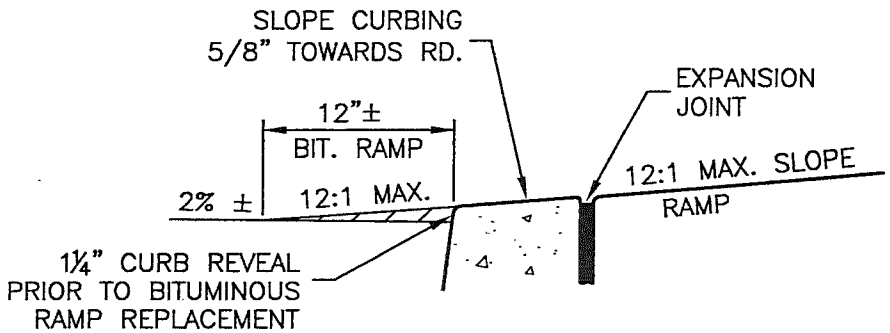

BITUMINOUS RAMP DETAIL

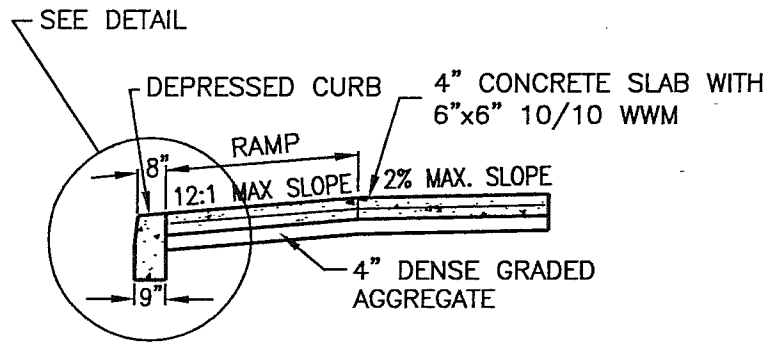

SECTION A–A

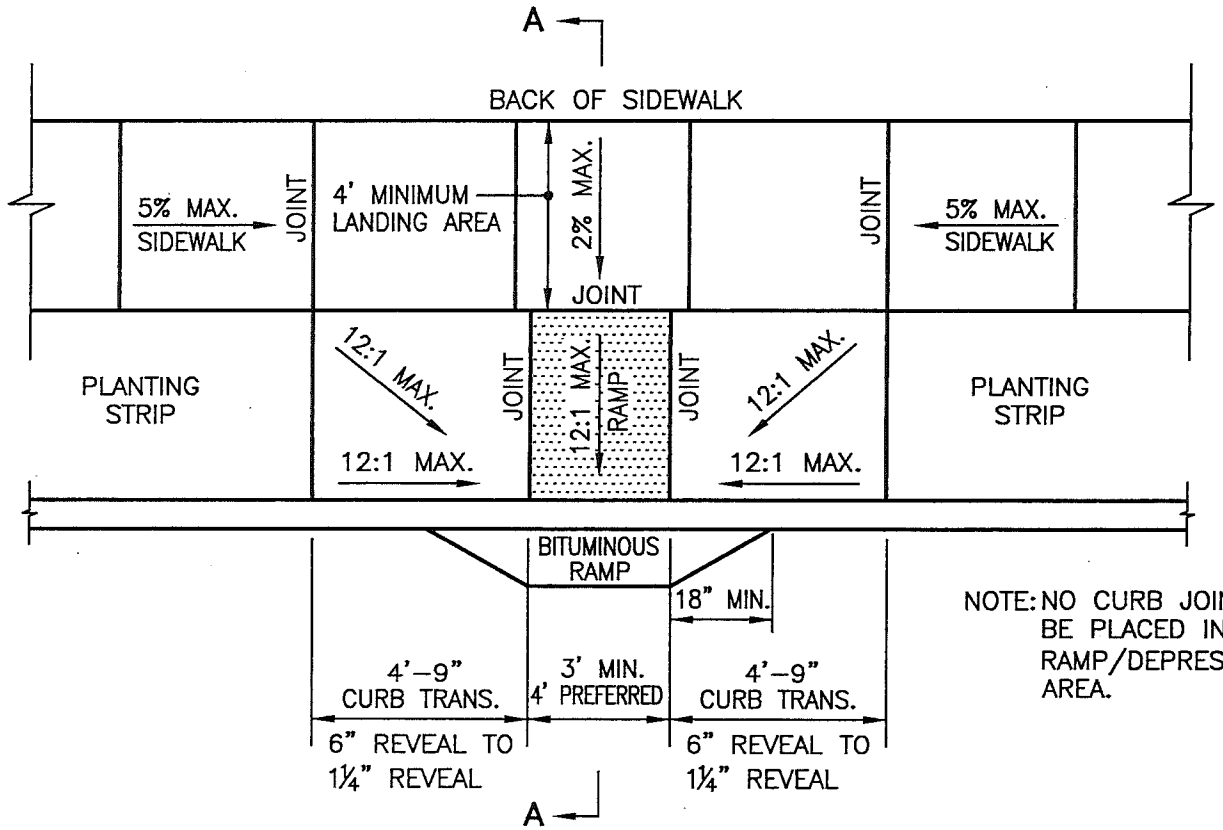

NOTE: NO CURB JOINTS SHALL BE PLACED IN THE RAMP/DEPRESSED CURB AREA.

TYPICAL RAMP

N.T.S.

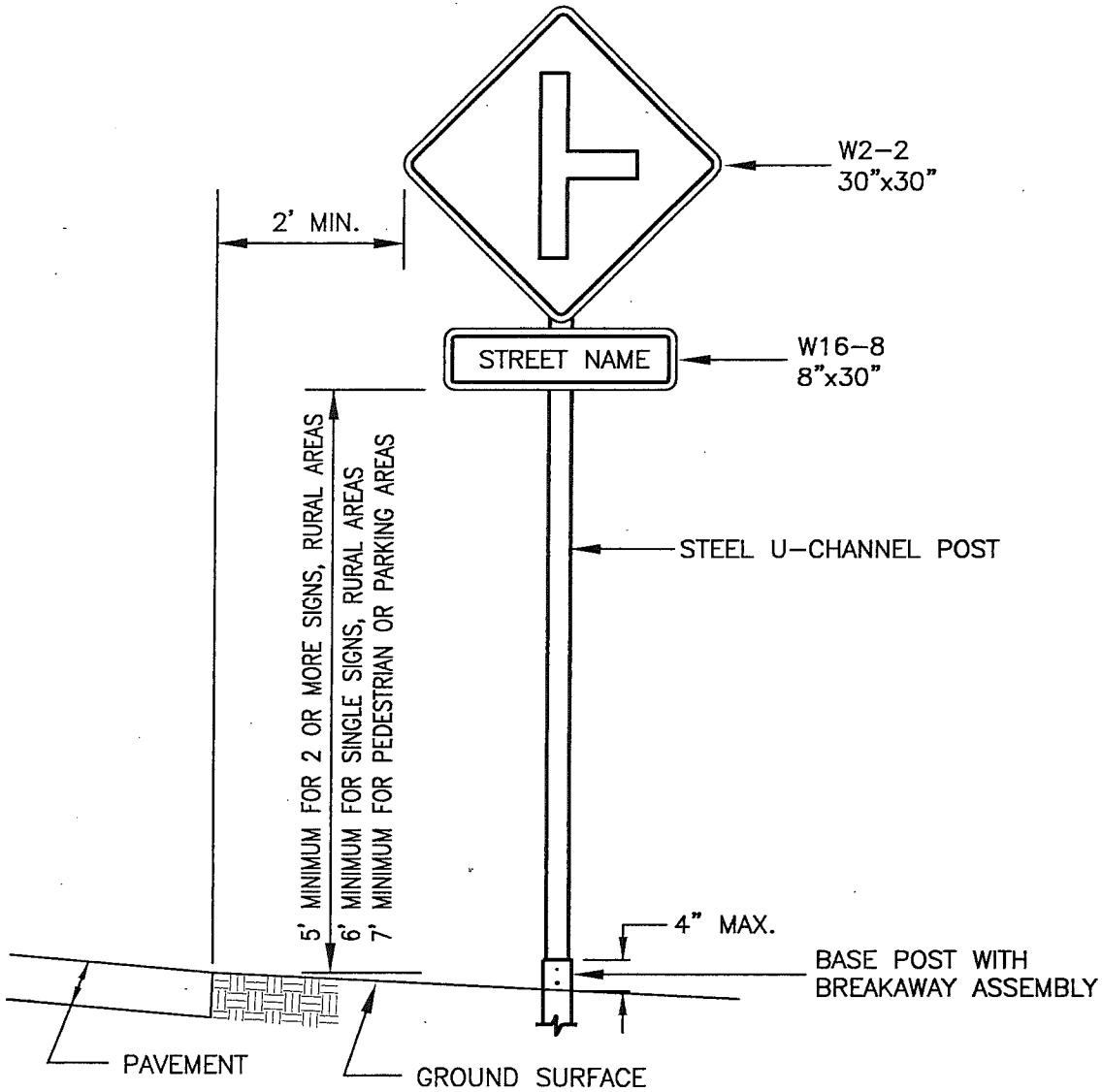

TYPICAL SIGN INSTALLATION

N.T.S.

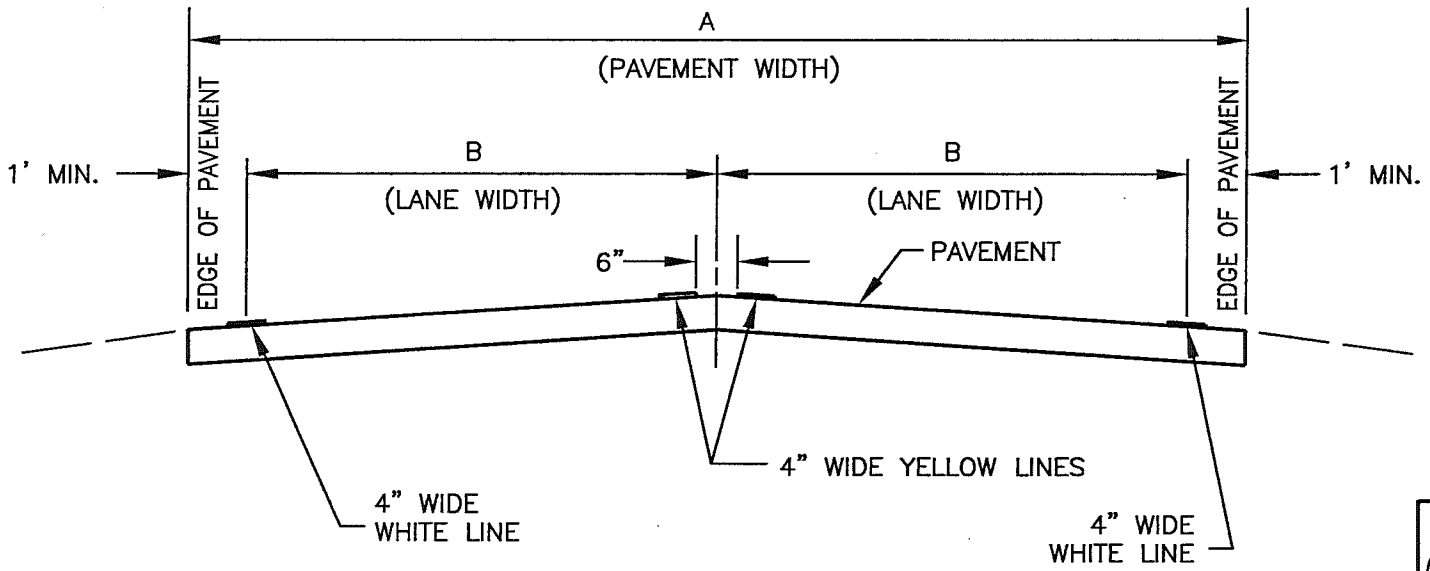

A (PAVEMENT WIDTH)	B (LANE WIDTH)
20'–21'	9'
22–23'	10'
24–25'	11'
≥ 26'	12'

TYPICAL STRIPED LANE WIDTHS

N.T.S.

POSTED SPEED LIMIT	MINIMUM SIGHT DISTANCE IN FEET (DESIRABLE SIGHT DISTANCE IN FEET)			
	RESIDENTIAL DRIVEWAY	MINOR DRIVEWAY	MAJOR DRIVEWAY	ROADWAY INTERSECTION
25	165	215	271 (395)	271 (395)
30	215	271	333 (445)	333 (445)
35	271	333	400 (500)	400 (500)
40	333	400	474 (555)	474 (555)
45	400	474	553 (610)	553 (610)
50	474	553	638 (665)	638 (665)

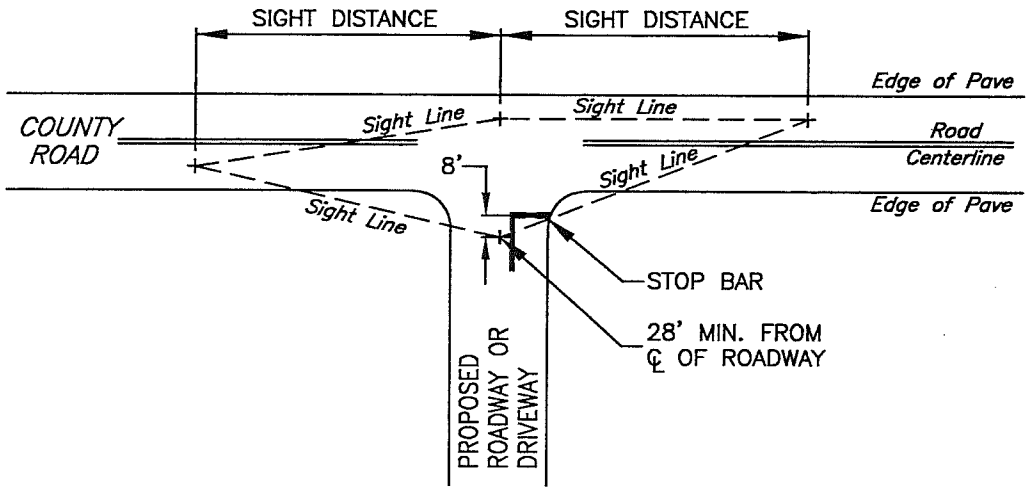

SIGHT DISTANCE REQUIREMENTS FOR STREETS AND DRIVEWAYS

N.T.S.

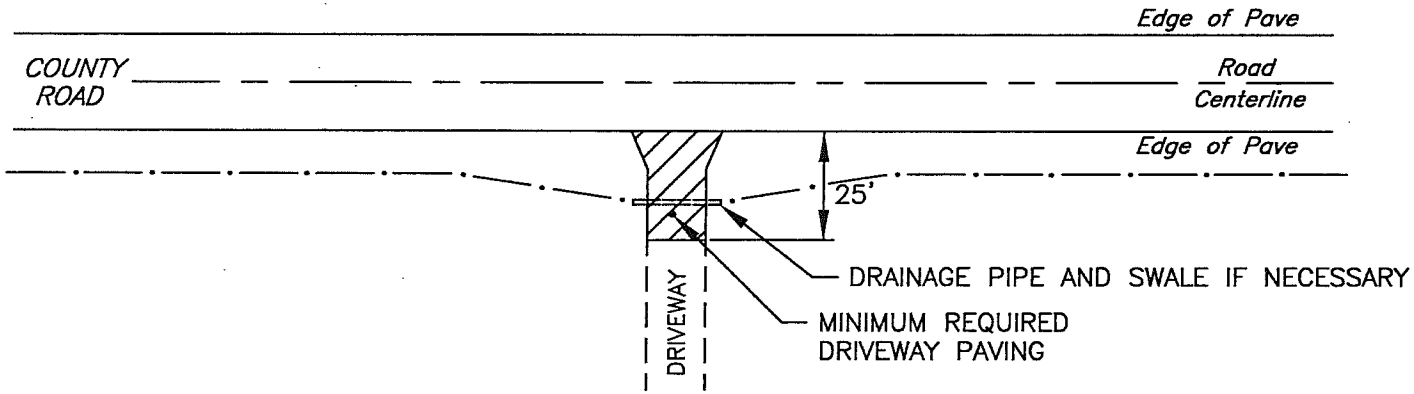

PLAN VIEW

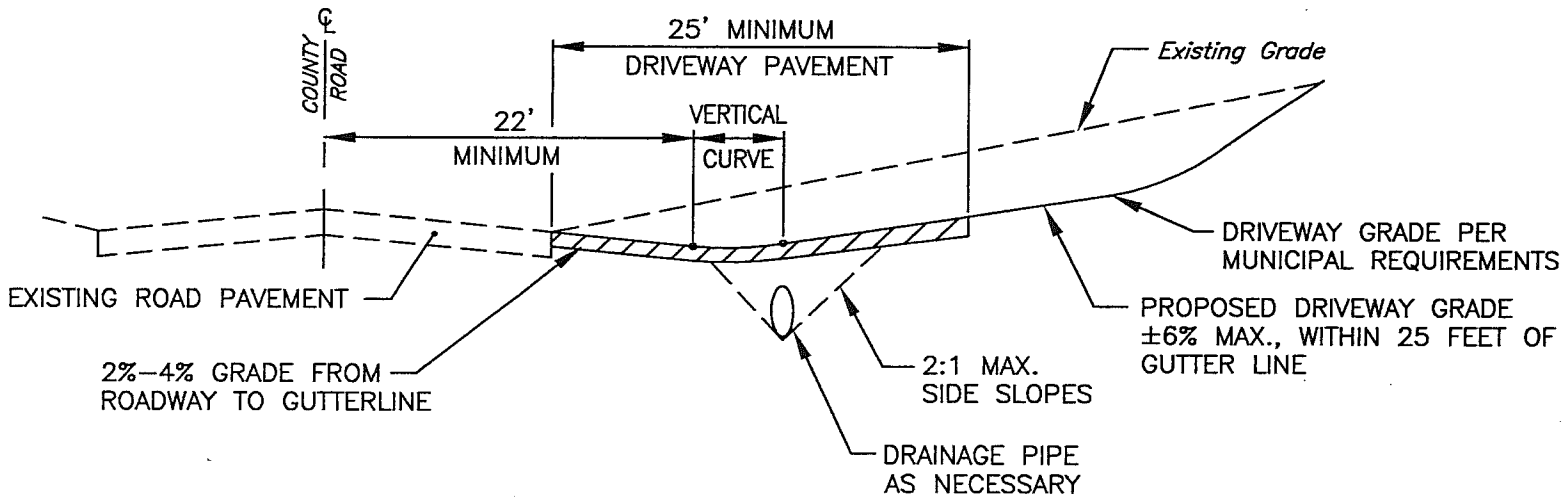

PROFILE

TYPICAL RESIDENTIAL DRIVEWAY

N.T.S.

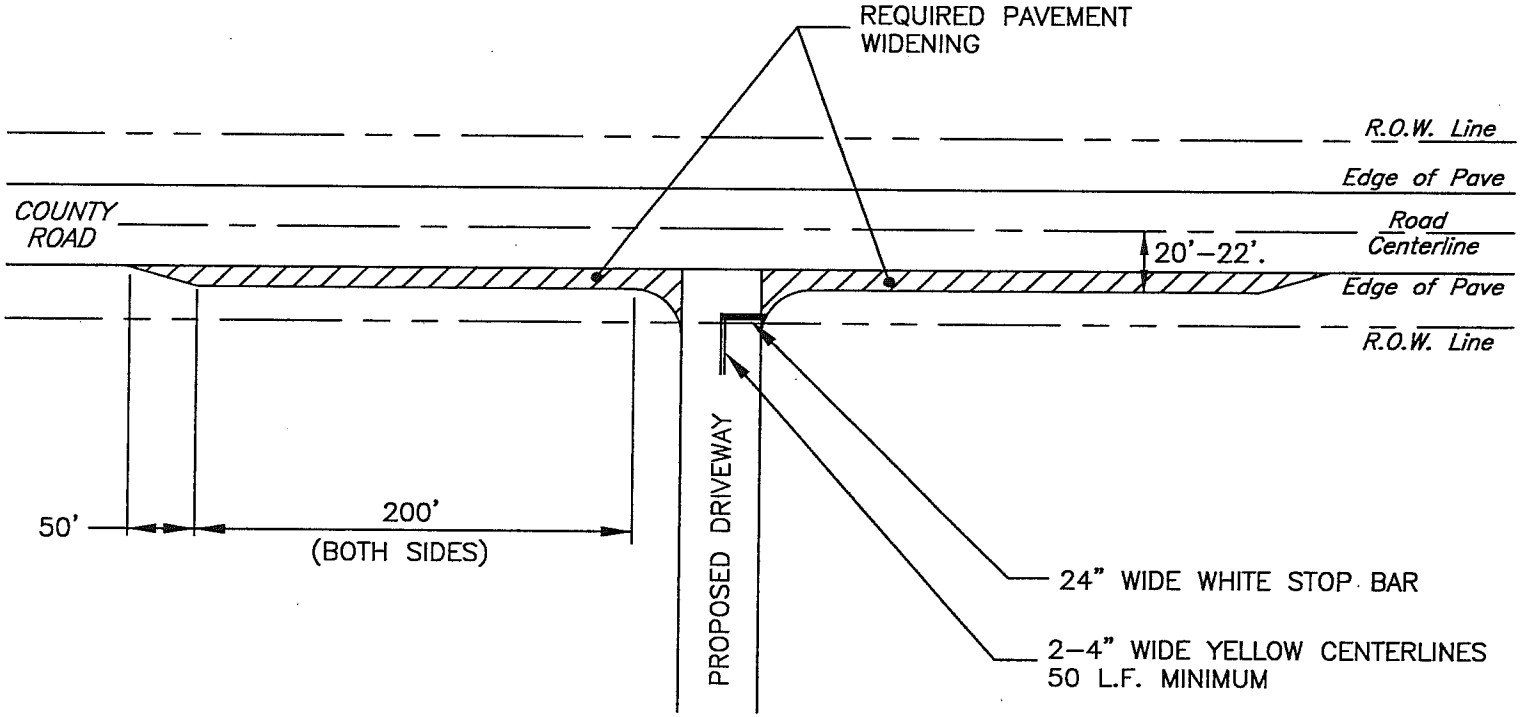

TYPICAL MINOR DRIVEWAY

N.T.S.

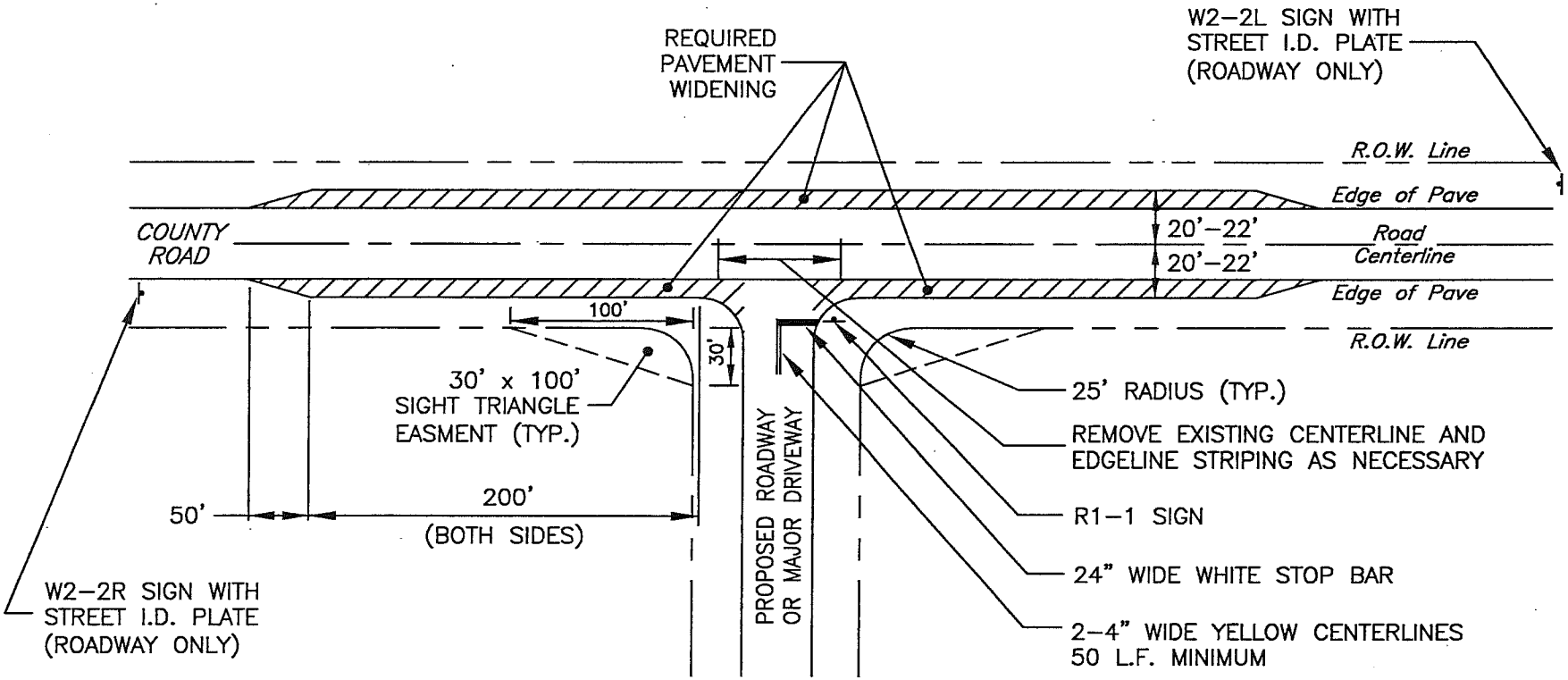

TYPICAL INTERSECTION/MAJOR DRIVEWAY

N.T.S.

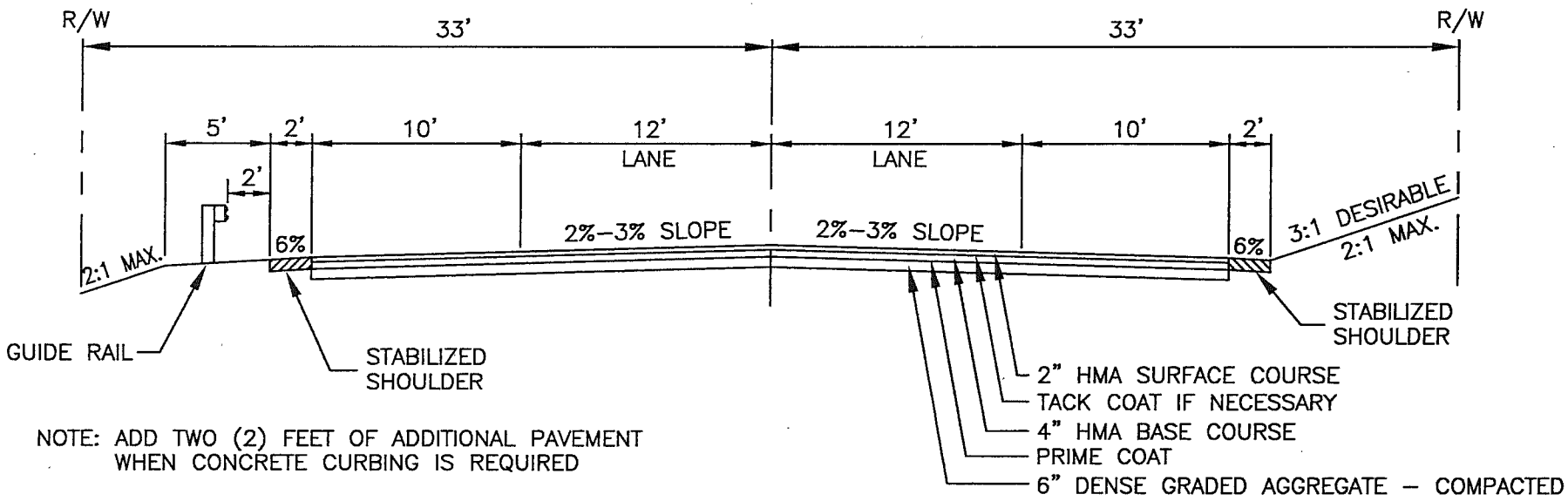

NOTE: ADD TWO (2) FEET OF ADDITIONAL PAVEMENT WHEN CONCRETE CURBING IS REQUIRED

MINIMUM DESIRABLE TYPICAL SECTION

MINOR ARTERIAL

Scale: 1/8"=1'

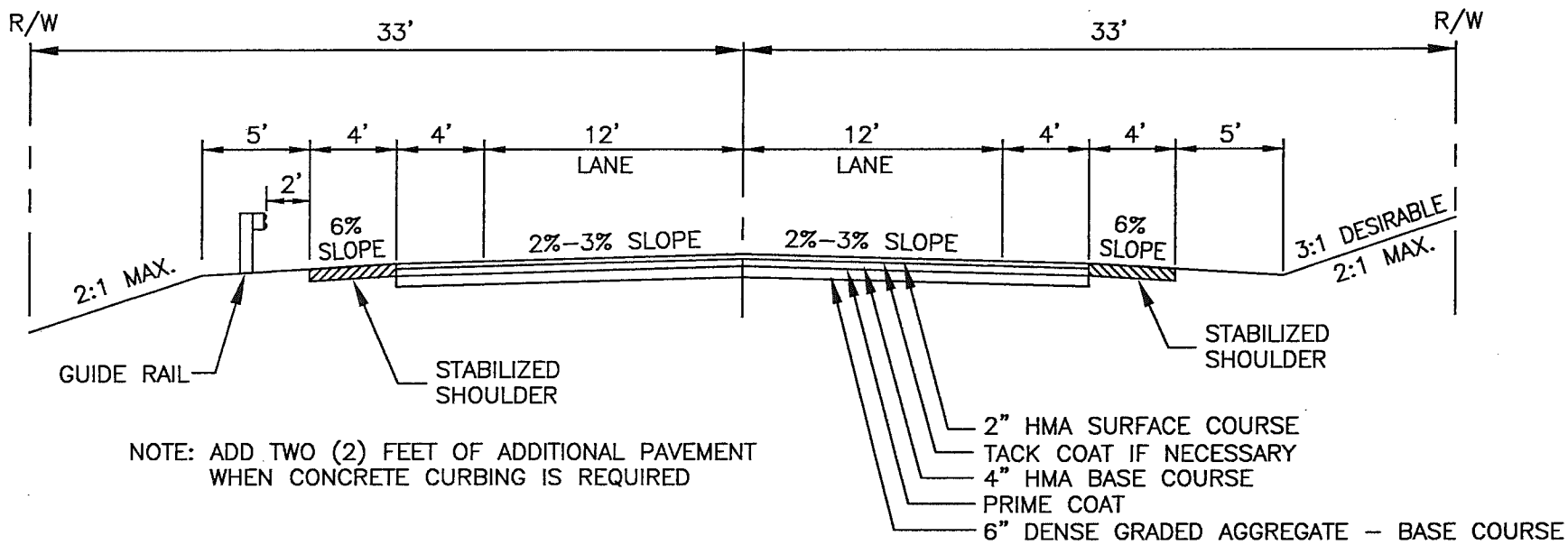

NOTE: ADD TWO (2) FEET OF ADDITIONAL PAVEMENT WHEN CONCRETE CURBING IS REQUIRED

MINIMUM DESIRABLE TYPICAL SECTION

MAJOR COLLECTOR

Scale: 1/8"=1'

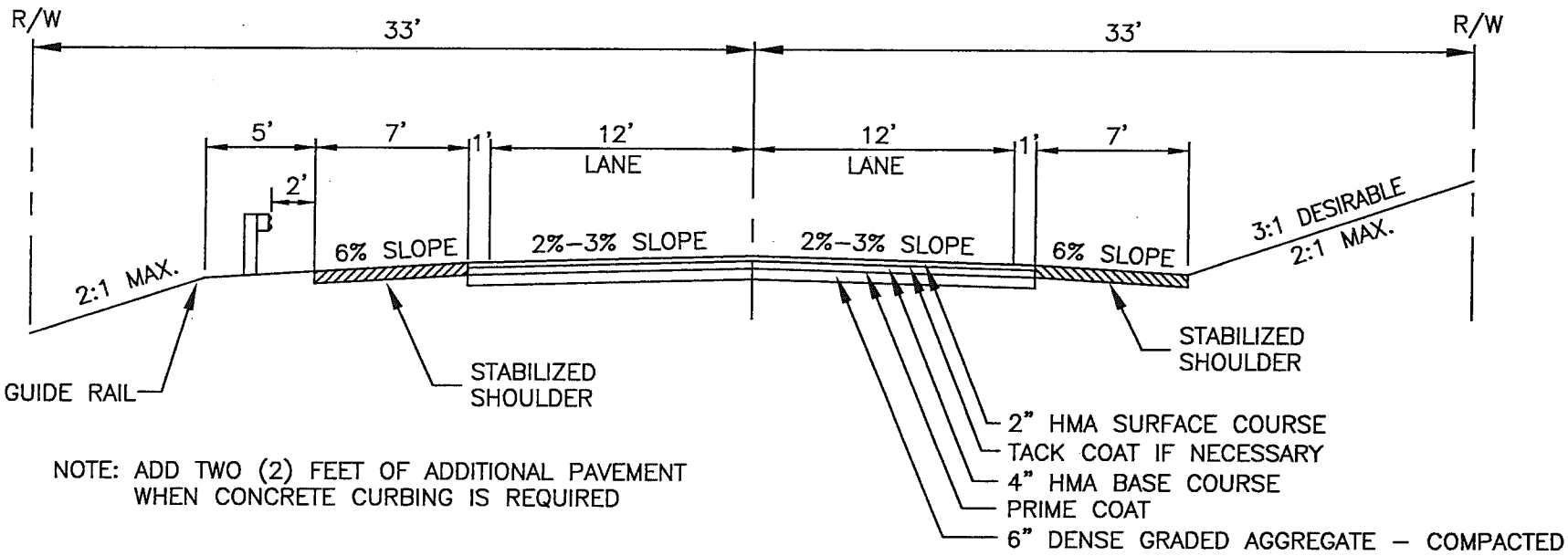

NOTE: ADD TWO (2) FEET OF ADDITIONAL PAVEMENT WHEN CONCRETE CURBING IS REQUIRED

MINIMUM DESIRABLE TYPICAL SECTION

MINOR COLLECTOR

Scale: 1/8"=1'

W16-8 ADVANCE STREET NAME PLAQUE

N.T.S.

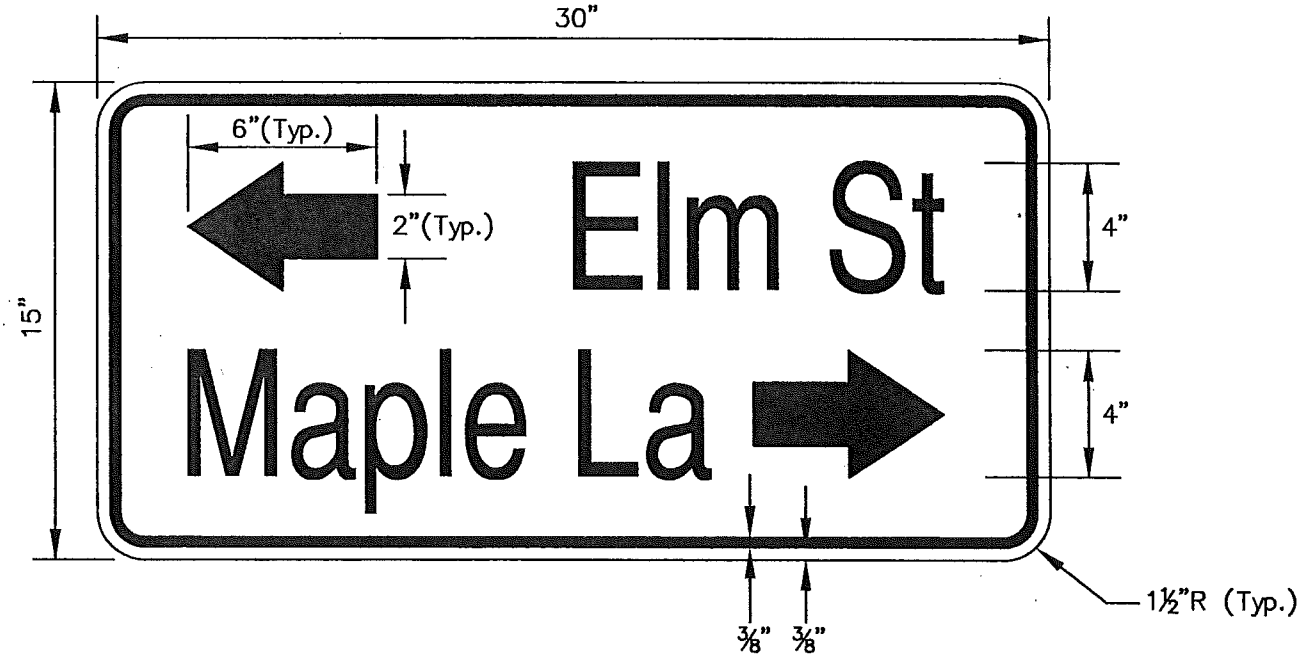

W16-8a ADVANCE STREET NAME PLAQUE

N.T.S.

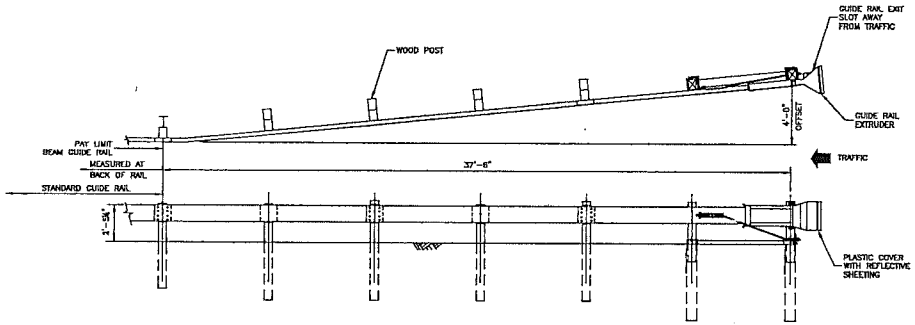

NOTE:
NUMBER OF POSTS, TYPE OF POST, POST SPACING, FLARE RATE AND MATERIALS SHALL BE IN ACCORDANCE WITH THE MANUFACTURER'S RECOMMENDATION AND THE DEPARTMENT'S QUALIFIED PRODUCTS LIST

FLARED GUIDE RAIL TERMINAL

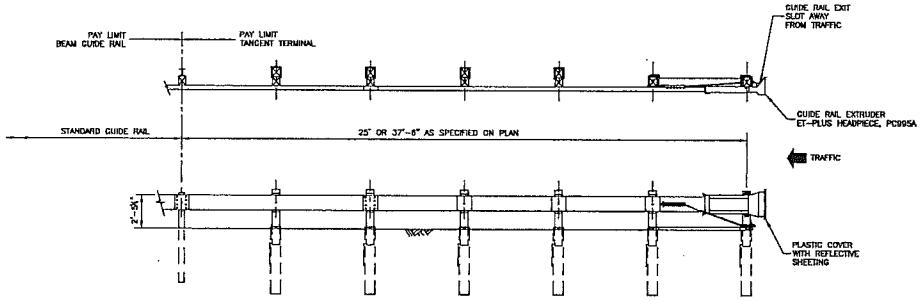

NOTE:
NUMBER OF POSTS, TYPE OF POST, POST SPACING, FLARE RATE AND MATERIALS SHALL BE IN ACCORDANCE WITH THE MANUFACTURER'S RECOMMENDATION AND THE DEPARTMENT'S QUALIFIED PRODUCTS LIST.

TANGENT GUIDE RAIL TERMINAL

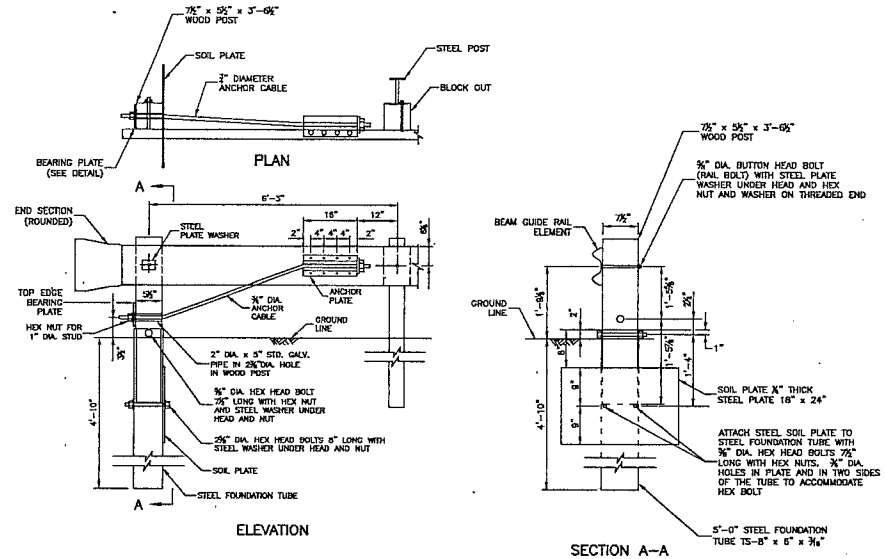

BEAM GUIDE RAIL END ANCHORAGE

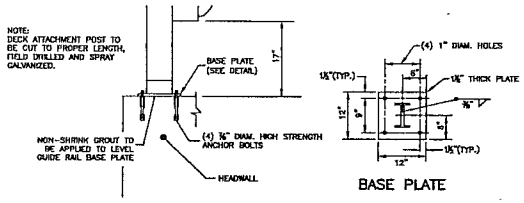

BASE PLATE

GUIDE RAIL ATTACHMENT TO HEADWALL AND BRIDGE DECK

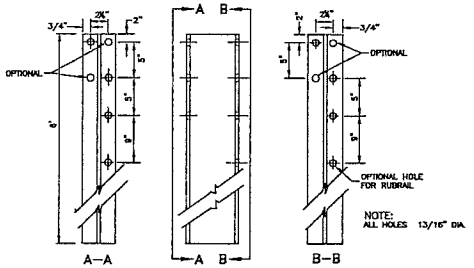

NOTE:
ALL HOLES 13/16" DIA.

8" x 4" Steel I, 8.5# or 9# per FOOT

6' GUIDE RAIL POST

PLANS AND SPECIFICATIONS PREPARED BY THE WARREN COUNTY ENGINEERING DEPARTMENT

WARREN COUNTY JR. ADMINISTRATION BUILDING
165 COUNTY ROUTE 519 SOUTH
BELVIDERE, NJ. 07823-1316
(908) 475-6545
FAX: (908) 475-6586

DAVID B. HICKS, P.E. County Engineer
LICENSE NUMBER 23364

GUIDE RAIL DETAILS
Scale: None 10/22/10

Improvements
PROJECT TITLE
TOWNSHIP WARREN COUNTY

SHEET NO.
1 of 4

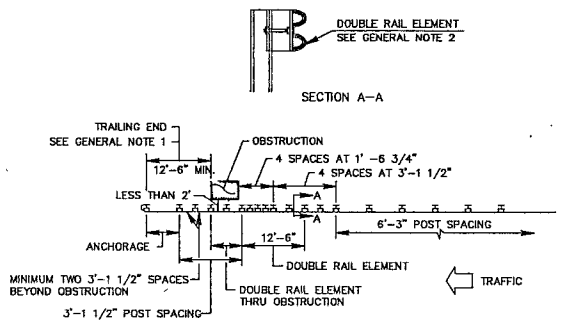

WHERE CLEARANCE FROM BACK OF RAIL
TO OBSTRUCTION IS LESS THAN 2'

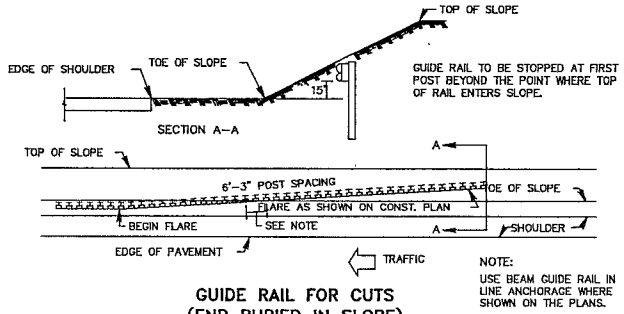

GUIDE RAIL FOR CUTS
(END BURIED IN SLOPE)

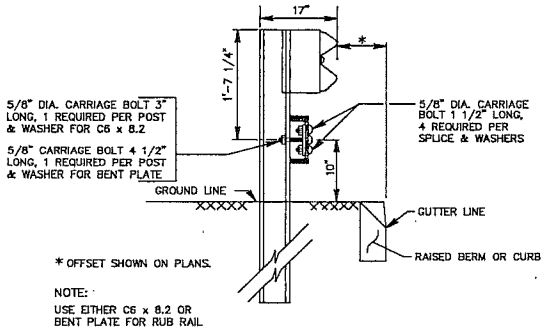

RUB RAIL SECTION

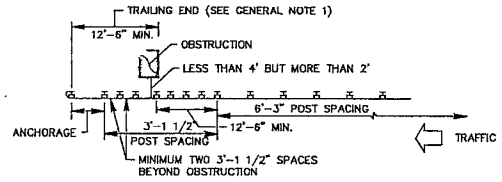

WHERE CLEARANCE FROM BACK OF RAIL TO OBSTRUCTION
IS MORE THAN 2' BUT LESS THAN 4'

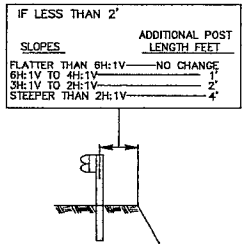

ADDITIONAL LENGTH
BEAM GUIDE RAIL POSTS

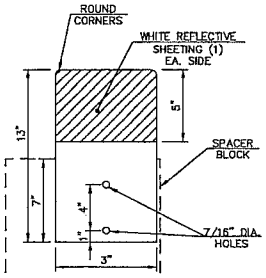

FRONT VIEW

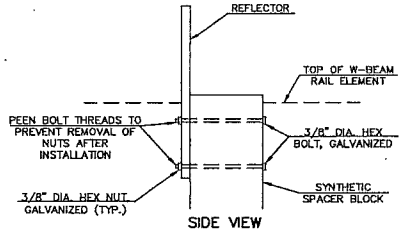

SIDE VIEW
(ONLY SYNTHETIC BLOCK
INSTALLATION SHOWN)

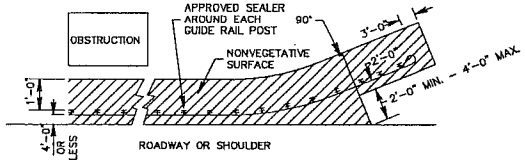

PLAN VIEW

NONVEGATATIVE SURFACE AROUND
FLARED GUIDE RAIL WHERE GUIDE RAIL OFFSET
FROM EDGE OF PAVEMENT IS 4'–0" OR LESS

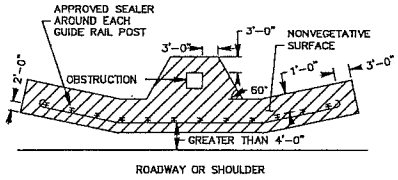

PLAN VIEW

NONVEGATATIVE SURFACE AROUND
FLARED GUIDE RAIL WHERE GUIDE RAIL OFFSET
FROM EDGE OF PAVEMENT IS GREATER THAN 4'–0"

NOTES:

1. REFLECTIVE SHEETING – REFLECTOR SHALL BE PERMANENTLY AFFIXED WITH RETRO–REFLECTIVE SHEETING, TYPE 3M DG³ SERIES 4000, OR APPROVED EQUAL.
2. REFLECTOR TO BE FABRICATED FROM MINIMUM 12 GAGE STEEL, ZINC PLATED OR APPROVED EQUAL.
3. GUIDE RAIL REFLECTOR TO BE ATTACHED TO SYNTHETIC AND STEEL SPACER BLOCKS WITH (2) 3/8" DIAMETER GALVANIZED HEX BOLTS AND NUTS. BOTH THE SYNTHETIC AND STEEL SPACER BLOCKS WILL REQUIRE DRILLING TO ALLOW FOR BOLT INSTALLATION.
4. REFLECTORS SHALL BE MOUNTED ON THE SPACER BLOCKS AT FIFTY FOOT (50'±) INTERVALS OR AS SHOWN ON PROJECT PLAN SHEETS.

GUIDE RAIL REFLECTOR DETAIL

PLANS AND SPECIFICATIONS PREPARED BY THE
WARREN COUNTY ENGINEERING DEPARTMENT
WARREN COUNTY JR. ADMINISTRATION BUILDING
165 COUNTY ROUTE 519 SOUTH
BELVIDERE, NJ. 07823-1316
(908) 475-6345
FAX: (908) 475-6586

DAVID B. HICKS, P.E. County Engineer
LICENSE NUMBER 23364

GUIDE RAIL DETAILS
Scale: None 10/22/10

Improvements
PROJECT TITLE
TOWNSHIP WARREN COUNTY

SHEET NO. 2 of 4

NOTE:

DIMENSIONS SHOWN MAY VARY FOR RECYCLED/ SYNTHETIC BLOCK OUTS.

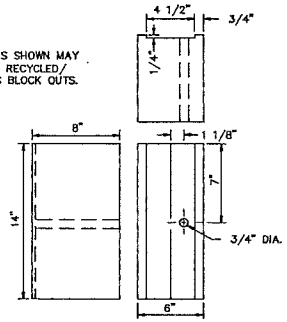

APPROVED RECYCLED/ SYNTHETIC MATERIALS

14" BLOCK OUT

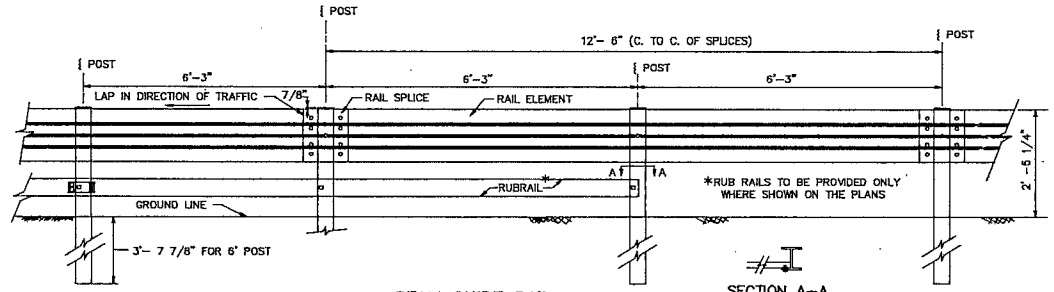

BEAM GUIDE RAIL

SECTION A-A

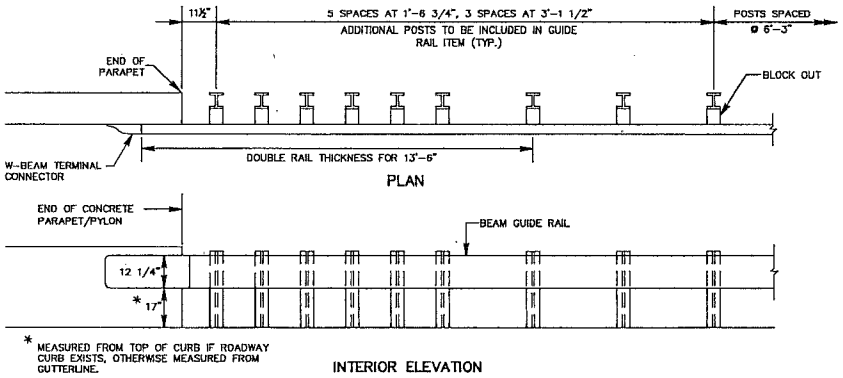

* MEASURED FROM TOP OF CURB IF ROADWAY CURB EXISTS, OTHERWISE MEASURED FROM GUTTERLINE.

INTERIOR ELEVATION

GUIDE RAIL BRIDGE ATTACHMENT

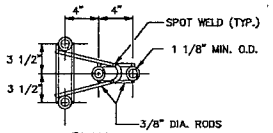

PLAN

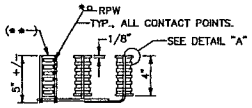

ELEVATION

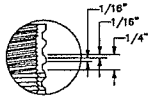

DETAIL "A"

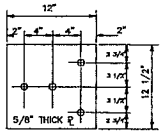

BACKUP PLATE FOR TERMINAL CONNECTOR

NOTES :

(*) EACH WELDED ATTACHMENT OF WIRE TO FERRULE SHOULD DEVELOP THE TENSILE STRENGTH OF THE WIRE.

(**) THREADED STEEL INSERT WITH SOLID BOTTOM TAPPED TO A MINIMUM THREADED DEPTH OF 2 1/2" FOR USE WITH 7/8" - 9 X 2 1/2" GALVANIZED H.S. HEX BOLT & A 15/16" I.D., 2 1/4" O.D., 5/32" THICK, TYPE A, PLAIN WASHER.

FOUR (4) BOLTS AND FOUR (4) WASHERS TO BE PROVIDED WITH EACH ASSEMBLY.

WIRES SHOWN ARE MINIMUM ALLOWABLE SIZE AND SHALL CONFORM TO THE REQUIREMENT OF ASTM A510, GRADE 1030 AND HAVE A MINIMUM TENSILE STRENGTH OF 100,000 psi.

FERRULES SHALL BE MADE OF STEEL MEETING THE REQUIREMENTS OF ASTM A108, GRADE 12L14. INSERTS SHALL BE TAPPED TO THE DIMENSIONAL REQUIREMENTS SPECIFIED IN ASTM A563 FOR NUTS RECEIVING GALVANIZED BOLTS.

BOLTS SHALL CONFORM TO THE REQUIREMENTS OF ASTM A325 OR A449 AND SHALL BE THREADED FULL LENGTH. WASHERS SHALL BE MADE OF STEEL AND SHALL MEET THE DIMENSIONAL REQUIREMENTS OF ASTM B272 TYPE A PLAIN WASHERS. BOTH SHALL BE GALVANIZED IN ACCORDANCE WITH ASTM A153.

WIRE DIAMETERS, MATERIALS REQUIREMENTS, FERRULE MATERIALS REQUIREMENTS AND EXTERNAL DIAMETERS MAY BE ALTERED PROVIDED MANUFACTURER DEMONSTRATES REVISED DESIGN IS EQUIVALENT TO THE DESIGN SHOWN IN THIS STANDARD.

DIMENSIONAL TOLERANCE NOT SHOWN OR IMPLIED ARE INTENDED TO BE THOSE CONSISTENT WITH THE PROPER FUNCTIONING OF THE PART, INCLUDING ITS APPEARANCE, AND ACCEPTED MANUFACTURING PRACTICE.

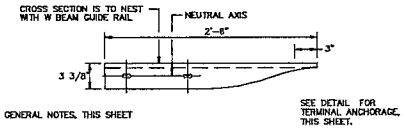

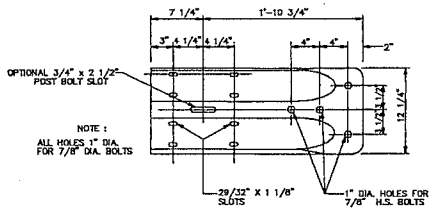

TERMINAL CONNECTOR
(AASHTO M180, CLASS B, TYPE 1)

W BEAM TERMINAL CONNECTOR

GENERAL NOTES

STRUCTURAL STEEL PLATES AND SHAPES SHALL CONFORM TO ASTM A36 AND SHALL BE GALVANIZED PER ASTM A123.

STEEL BOLTS, NUTS AND WASHERS SHALL CONFORM TO ASTM A307, UNLESS DESIGNATED AS HIGH STRENGTH. HIGH STRENGTH BOLTS, NUTS AND WASHERS SHALL CONFORM TO ASTM A325. HARDWARE SHALL BE GALVANIZED PER ASTM A153.

CONCRETE SHALL BE CLASS B CONCRETE.

REINFORCEMENT SHALL CONFORM TO ASTM A 615, GRADE 60.

HIGH STRENGTH BOLTS FOR BASE PLATE ANCHORAGE SHALL BE FULLY THREADED AND INSTALLED IN CORED HOLES NO GREATER THAN THE BOLT DIAMETER PLUS 1/4". CARE SHALL BE EXERCISED TO AVOID DAMAGE TO EXISTING REINFORCEMENT AND CONDUITS. MINIMUM EMBEDMENT LENGTH SHALL BE 6". BOLTS SHALL BE EPOXY GROUTED IN PLACE PER MANUFACTURER'S RECOMMENDATIONS TO ATTAIN A MINIMUM PULLOUT STRENGTH OF 24,000 POUNDS AT THE CONSTRUCTION SITE AS CERTIFIED BY THE CONTRACTOR.

HIGH STRENGTH BOLTS FOR BASE PLATE ANCHORAGE MAY BE CAST IN PLACE IN FRESH CONCRETE WITH A MINIMUM EMBEDMENT LENGTH OF 20".

PLANS AND SPECIFICATIONS PREPARED BY THE WARREN COUNTY ENGINEERING DEPARTMENT

WAYNE DWIGHT JR. ADMINISTRATION BUILDING
193 COUNTY ROUTE 519 SOUTH
BELVIDERE NJ 07823-1316
(908) 475-6545
FAX: (908) 475-6586

DAVID B. HICKS, P.E. County Engineer
LICENSE NUMBER 23364

GUIDE RAIL DETAILS

Scale: None 10/22/10

Improvements
PROJECT TITLE
TOWNSHIP WARREN COUNTY

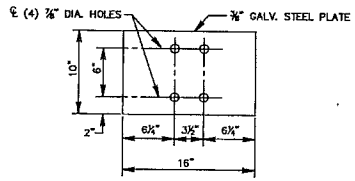

MOUNTING PLATE

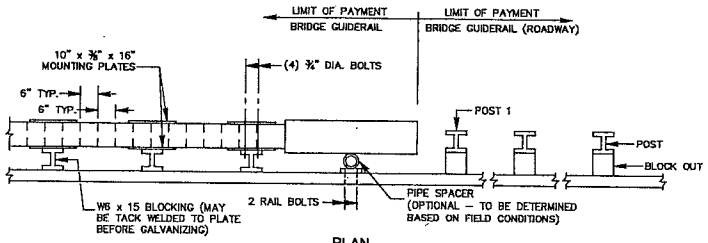

PLAN

NOTE: WHEN THE CONFIGURATION OF BRIDGE ABUTMENTS AND WINGWALLS DO NOT ACCOMMODATE THE INSTALLATION OF POST 1, THE POST MAY BE ATTACHED TO THE ABUTMENT HEADER WITH THE USE OF A BASE PLATE.

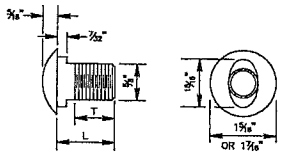

⅜" BUTTON HEAD BOLT

TYPE	L	T
SPLICE	1¼"	1¼"
RAIL	2"	1½"

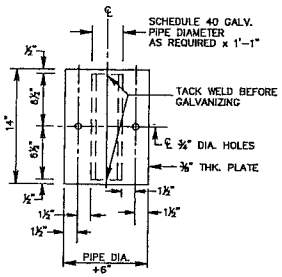

PIPE SPACER

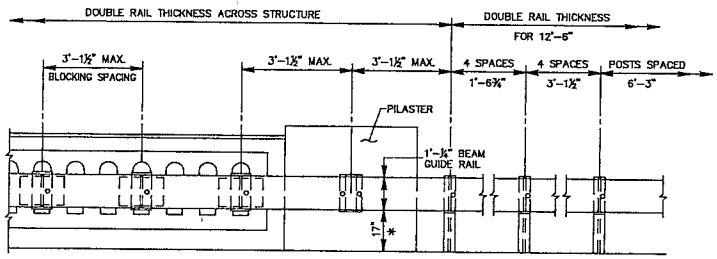

* MEASURED FROM TOP OF CURB IF ROADWAY CURB EXISTS, OTHERWISE MEASURED FROM GUTTERLINE.

ELEVATION

SEE GENERAL NOTES UNDER 'GUIDE RAIL BRIDGE ATTACHMENT' ON PREVIOUS PAGE

GUIDE RAIL ATTACHMENT TO BALUSTRADE

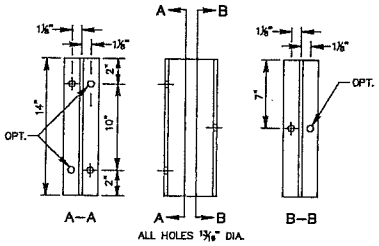

14" ROUTED SPACER
6"x4" STEEL I–BEAM
(8.5# OR 9#)

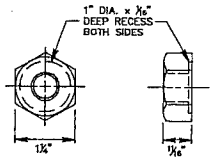

⅝" DIA. RECESS NUT

SPLICE & RAIL NUT & BOLT

PLANS AND SPECIFICATIONS PREPARED BY THE WARREN COUNTY ENGINEERING DEPARTMENT

WAYNE DeMARE JR. ADMINISTRATION BUILDING
165 COUNTY ROUTE 519 SOUTH
BELVIDERE, N.J. 07823-1219
(908) 475-8545
FAX: (908) 475-8586

DAVID B. HICKS, P.E. County Engineer
LICENSE NUMBER 23364

GUIDE RAIL DETAILS
Scale: None 10/22/10

Improvements
PROJECT TITLE
TOWNSHIP WARREN COUNTY

SHEET NO. 4 of 4